# HK-1410

# YANGON PAN PACIFIC HOTEL, YANGON, MYANMAR
# 仰光泛太平洋酒店

## Deluxe King & Deluxe HW Twin Guestrooms
## ( DK1, DK2A & DK2B-DHWT )
## Loose Furniture Specification

## 標準大床房 及 標準雙拼床房
## 活動傢具檔案

## ( F-100 )

Issue for Tender Package | 招標階段發送

| | |
|---|---|
| Issue Date 發出日期 | 09 October, 2015 |
| Revision Date 修改日期 | 31 March, 2016 |
| Revision No 修改次數 | 3rd |

CCD
ChengChung Design

All proposed items are Designer's preference. Contractor can provide alternative with equivalent quality and performance for Designer's approval
所有列明之產品有設計師認可。承建商亦可在同等設計及品質方向上提供其他選擇以供設計師審批
Copyright to be owned by CCD Cheng Chung Design Ltd. 文件屬於 CCD 鄭中設計; 未經許可, 不得翻印。

# LOOSE FURNITURE INSTRUCTIONS | 活動傢具說明

CCD
ChengChung Design

## CASEGOODS I 木器傢具

1. Main Wood Species : Rosewood – Natural Finish. 主要木種：深色檀木-開放漆
2. All edges to be eased. 所有邊緣須做小磨邊
3. All edges are sealed for moisture resistance. 所有邊緣密封(防潮性)
4. Part of furniture to have metal cap on legs. 部份傢具會有金屬腳套
5. Bottom of legs to have carpet glides. 傢具腳之底部須安裝腳墊方便於地毯上移動
6. All furniture is finished on 3 sides (top, sides & bottom), back is semi-finished (colored to match and clear top coat). 所有傢具三面見光(台面、側面及底部)，背部不見光處可作打磨上同色油
7. Image for reference only, scale & finish may not be accurate. 圖片只作參考用，比例及飾面非準確

## SEATING I 坐椅類

1. Main Wood Species : Rosewood – Natural Finish. 主要木種：深色檀木-開放漆
2. All exposed woods to be selected solid wood (sofa / armchair). 所有外露之木採用實木(沙發/扶手椅)
3. Bottom of legs to have carpet glides. 傢具腳之底部須安裝腳墊方便於地毯上移動
4. Seat springs: sinuous (no sag) construction; 8 gauge wire; 127.00mm or less spacing on bonded polyester deck insulator. 座位彈簧：蛇形（無凹陷）結構；8 線粗；與面層最少保留 127.00mm 或更少之距離
5. Back springs: sinuous (no sag) construction; 11 or 12 gauge wire; and lateral stabilizing wrapped edge wire. 背部彈簧：蛇形（無凹陷）結構；採用 11 或 12 線粗；橫向穩定
6. Cushions: All foam must meet CAL 117 or equal flame resistant test; Sleeper and Chaise Section: 101.60mm thick HR foam core (minimum 1.8 density, 24lb); (2) 25.40mm thick topper form (1.5 density, 17 lb); fiber wrap, 1.25 oz top, front and back; Fiber / topper foam to be pinched and glued on sides. 靠墊：所有海綿必須符合 CAL117 或等於阻燃試驗; 沙發床和貴妃椅：101.60 毫米厚 HR 海綿芯（最小 1.8 密度，24 磅）；（2）25.40 毫米厚禮帽形式（1.5 密度，17 磅）;纖維外圍 1.25 安士於頂部、正面和背面; 纖維/面層海綿黏合
7. All interior foam, fill, and general construction of upholstery units must pass or exceed all country, province/ state, and / or local fire codes and regulations. 所有內部用海綿、填充物和面料布料必須通過或超過所屬國家，省/州和/或地方消防法規和規章
8. Manufacturer must provide adequate bracing to reinforce against any movement. 製造商必須提供足夠支撐不可晃動
9. Desk chair adjusted in 3 ways is needed : tilt, tilt tension & seat height. 書椅需有 3 種可調較方式：傾斜，傾斜度的鬆緊度和座椅高度
10. Image for reference only, scale & finish may not be accurate. 圖片只作參考用，比例及飾面非準確

## MATTRESS / BED BASE I 床墊 / 床架

1. Manufacturer 生產商 ：Simmons 蓆夢思 / TBC 待定
2. Model 型號 ：Beautyrest (Mattress 床墊) / Triton Foundation (Box Spring 彈簧床箱)
3. King size mattress 大床呎吋 ：1980W x 2030L x 330H mm
4. Twin size mattress 單人床呎吋 ：1220W x 2030L x 330H mm
5. HWT size mattress 荷里活單人床呎吋 ：1100W x 2030L x 330H mm
6. Bed base size 床架呎吋 ：340H mm
7. The total height of bed is 680mm (included bed cover & duvet cover). 床完成面高度 680mm (包括床單及被套)
8. Image for reference only, scale & finish may not be accurate. 圖片只作參考用，比例及飾面非準確

| NOTE (S) \| 備註 |
|---|
| * All quantities to be verified by manufacturers according to drawings, and confirmed with project's owner and hotel operator.<br>按圖紙核對所有數量及傢俱制作單位必須與項目甲方及酒店管理方作最後確認。 |

## FABRIC I 布料

1. Fabric must pass or exceed all country, province / state, and / or local fire codes and regulations 布料必須通過或超過所屬國家，省/州和/或地方消防法規和規章
2. Fabric must have wear test, antifouling and waterproof functions. 布料必須具備耐磨性、防污及防水功能
3. Final strike-off of fabric to be approved by design consultant prior to purchasing. 購買布料前須由設計顧問確認無誤

## OTHERS I 其他

1. All shop drawings must be submitted by manufacturer for design consultant approval. 製造商必須提供所有深化圖給設計顧問批閱
2. All materials must be submitted by manufacturer design consultant approval. 製造商必須提交所有材料給設計顧問批閱
3. All dimensions should verify on site by manufacturer. 製造商須核對現場與傢具呎吋確保無誤
4. Quantity of lamp/lighting should checked by manufacturer. 製造商須核對傢具數量
5. Manufacturer should be product a phototype of each furniture which is the quantity over 5 pieces. 所有超過 5 件(數量)之傢具製造商必須生產樣板

| NOTE (S) I 備註 |
|---|
| * All quantities to be verified by manufacturers according to drawings, and confirmed with project's owner and hotel operator.<br>按圖紙核對所有數量及傢俱制作單位必須與項目甲方及酒店管理方作最後確認。 |

# LOOSE FURNITURE SCHEDULE | 活動傢具清單

CCD ChengChung Design

| PROJECT \| 項目名稱 | PROJ. # \| 項目編號 | STAGE \| 階段 |
|---|---|---|
| Yangon Pan Pacific Hotel, Myanmar \| 仰光泛太平洋酒店 | HK-1410 | Tender Package<br>招標階段 |

| AREA \| 區域 | | |
|---|---|---|
| Deluxe King & Deluxe HW Twin Guestrooms \| 標準大床房 及 標準雙拼床房 | | |
| ISSUE DATE \| 發出日期 | REVISION DATE \| 修改日期 | VER \| 次數 |
| 09 October 2015 | 06 November 2015, 01 December 2015, 31 March 2016 | 3rd |

| ITEM NAME<br>編號 | QTY<br>數量 | DESCRIPTION<br>描述 | REMARKS<br>備注 |
|---|---|---|---|
| F-100<br>(Rev. 3rd) | Verify | Motorized Sheer Roman Blind<br>電動窗紗羅馬簾 | All Rooms |
| F-101 | Verify | Motorized Blackout Roller Blind<br>電動遮光捲簾 | All Rooms |
| F-102L<br>(Rev. 3rd) | Verify | Sofa (Arm on Left)<br>沙發(左邊扶手) | DK1, DK2A Typical |
| F-102R<br>(Rev. 3rd) | Verify | Sofa (Arm on Right)<br>沙發(右邊扶手) | DK1, DK2A Typical |
| F-102A<br>(Rev. 3rd) | 1 x Verify | Sofa Cushion A<br>沙發抱枕 A | DK1, DK2A Typical |
| F-102B<br>(Rev. 3rd) | 1 x Verify | Sofa Cushion B<br>沙發抱枕 B | DK1, DK2A Typical |
| F-103<br>(Rev. 3rd) | Verify | Round Breakfast Table<br>圓形早餐桌 | DK1, DK2A Typical<br>DK2B DHWT |
| F-104 | Verify | Desk Chair<br>書椅 | All Rooms |
| F-105 | Verify | King Bed<br>大床 | All DK1& DK2A |
| F-106<br>(Rev. 3rd) | Verify | Night Stand<br>床頭柜 | All Rooms |
| ~~F-107~~<br>~~(Rev. 3rd – Cancelled)~~ | ~~Verify~~ | ~~Dressing Mirror with Towel Rack @ Bathroom~~<br>~~梳妝鏡子連毛巾架(衛生間)~~ | DK2A, DK2B |
| ~~F-108~~<br>~~(Rev. 3rd – Cancelled)~~ | ~~Verify~~ | ~~Floor Towel Rack @ Bathroom~~<br>~~地面毛巾架(衛生間)~~ | DK2A, DK2B |
| F-109a<br>(Rev. 3rd) | Verify | Bed End Bench (Long)<br>床尾椅(長) | All DK2A |
| F-109b<br>(Rev. 3rd) | Verify | Bed End Bench (Short)<br>床尾椅(短) | All DK2B |
| F-110<br>(Rev. 1st) | Verify | Armchair<br>扶手椅 | DK2A & DK2B<br>Connection Door |
| F-110A | 1 x Verify | Armchair Cushion<br>扶手椅抱枕 | DK2A & DK2B<br>Connection Door |
| F-111 | Verify | Twin Bed<br>單人床 | All DK2B |
| F-112<br>(Rev. 3rd) | Verify | Motorized Blackout Roller Blind @ Bathroom<br>電動遮光捲簾(衛生間) | DK1, DK2A, KS2B |
| ~~F-113~~<br>~~(Rev. 3rd – Cancelled)~~ | ~~Verify~~ | ~~Towel Rake with drawer @ Bathroom~~<br>~~毛巾架連抽屜(衛生間)~~ | DK1 |
| ~~F-114~~<br>~~(Rev. 3rd – Cancelled)~~ | ~~Verify~~ | ~~Floor Towel Rack @ Bathroom~~<br>~~地面毛巾架(衛生間)~~ | DK1 |

| NOTE (S) \| 備註 |
|---|
| * All quantities to be verified by manufacturers according to drawings, and confirmed with project's owner and hotel operator.<br>按圖紙核對所有數量及傢俱制作單位必須與項目甲方及酒店管理方作最後確認。 |

# LOOSE FURNITURE SCHEDULE | 活動傢具清單

CCD ChengChung Design

| PROJECT \| 項目名稱 | PROJ. # \| 項目編號 | STAGE \| 階段 |
|---|---|---|
| Yangon Pan Pacific Hotel, Myanmar \| 仰光泛太平洋酒店 | HK-1410 | Tender Package<br>招標階段 |

| AREA \| 區域 | | |
|---|---|---|
| Deluxe King & Deluxe HW Twin Guestrooms \| 標準大床房 及 標準雙拼床房 | | |
| ISSUE DATE \| 發出日期 | REVISION DATE \| 修改日期 | VER \| 次數 |
| 09 October 2015 | 06 November 2015, 01 December 2015, 31 March 2016 | 3rd |

| ITEM NAME<br>編號 | QTY<br>數量 | DESCRIPTION<br>描述 | REMARKS<br>備注 |
|---|---|---|---|
| | | | |
| F-115<br>(Add. 3rd) | Verify | Sofa (Arm on Left)<br>沙發(左邊沙發) | DK-2B DHWT |
| F-115A<br>(Add. 3rd) | 1 x Verify | Sofa Cushion A<br>沙發抱枕 A | DK-2B DHWT |
| F-115B<br>(Add. 3rd) | 1 x Verify | Sofa Cushion B<br>沙發抱枕 B | DK-2B DHWT |
| | | | |
| | | | |
| | | | |
| | | | |
| | | | |
| | | | |
| | | | |
| | | | |
| | | | |
| | | | |
| | | | |
| | | | |
| | | | |
| | | | |
| | | | |
| | | | |
| | | | |

| NOTE (S) \| 備註 |
|---|
| * All quantities to be verified by manufacturers according to drawings, and confirmed with project's owner and hotel operator.<br>按圖紙核對所有數量及傢俱制作單位必須與項目甲方及酒店管理方作最後確認。 |

# LOOSE FURNITURE SPECIFICATION
# 活動傢具圖表

| PROJECT \| 項目名稱 | PROJ. # \| 項目編號 | ISSUE DATE \| 發送日期 | |
|---|---|---|---|
| Yangon Pan Pacific Hotel, Myanmar<br>仰光泛太平洋酒店 | HK-1410 | 09 October, 2015 | **F-100** |

| | | | |
|---|---|---|---|
| **Description**<br>項目說明 | Motorized Sheer Roman Blind @ All Rooms<br>電動窗紗羅馬簾<br>(所有客房) | | |
| **Location**<br>位置 | Deluxe King & Deluxe HW Twin Guestrooms<br>標準大床房及標準雙拼床房 | | |
| **Issue Stage**<br>發送階段 | Tender Package<br>招標階段 | | |
| **Rev. #**<br>修訂 | 1st | **Total Page**<br>總頁碼 | 1 |
| **Revision Date**<br>修改日期 | 31 March 2016 | | |
| **DETAIL SPECIFICATION \| 詳細內容** | | | |
| **Finish**<br>飾面 | | | |
| **Dimension**<br>尺寸（mm） | 寬 (W)<br>深 (D)<br>高 (H)<br>坐高 (SH) | check on site<br>按現場呎吋 | |
| **Qty.**<br>數量 | Verify | | |
| **Dwg. Ref**<br>圖號 | | | |
| **Manufacturer**<br>生產商 | | | |
| **Order Ref.**<br>訂貨編號 | | | |
| **Supplier**<br>供應商 | | | |
| **Contact**<br>聯繫人 | | | |
| **Phone**<br>電話 | | | |
| **Fax**<br>傳真 | | | |
| **Email**<br>電郵 | | | |
| **Remark(s)**<br>其他 | | | |

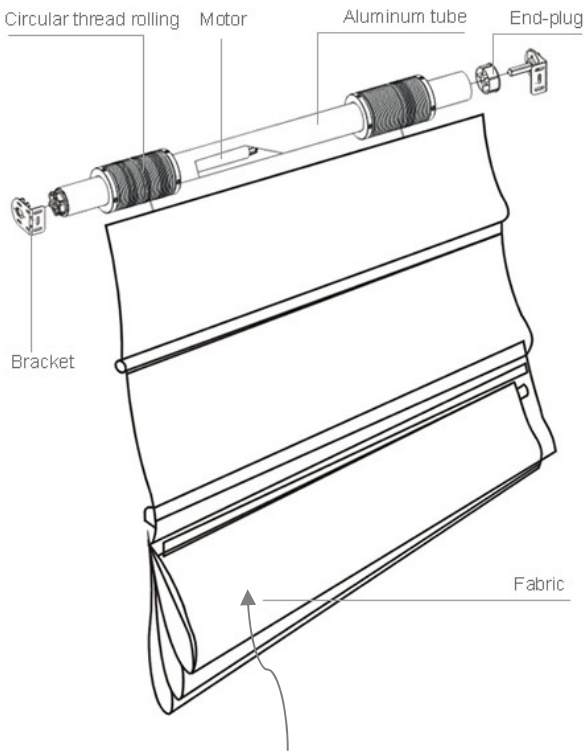


Sheer Fabric Refer To F-100.1
窗紗布料見 F-100.1

- Please refer to Ironmongery Spec I-100 for System.
- 電動系統請參照五金檔案 I-100.

**NOTE (S) | 備註**

This drawing is for reference. All dimensions should be verified by the Contractor on site. This should be made in conjunction with the Design's specification and conditions of the contract. This drawing is the property of Cheng Chung Design (HK) Ltd. and is not to be reproduced without the Designer's consent.
圖片只作參考之用承辦商必須以地盤尺寸為准。
必須依設計師所訂樣版及尺寸為准。圖片屬於 CCD 未經准許不得翻印。
1.材料須保證品質並符合大量施工需要；2.承建商應提供實物樣板供設計師認可；
3.承建商必須提前預測材料定貨期事宜；4.如需替換同類其他品牌材料，需承建方提供同類品牌樣品供設計方重新確定；
5.承辦商或制造商必須提供深化圖給設計師作最終確認方可下單或生產；

# LOOSE FURNITURE SPECIFICATION
# 活動傢具圖表

CCD
ChengChung Design

| PROJECT \| 項目名稱 | PROJ. # \| 項目編號 | ISSUE DATE \| 發送日期 | |
|---|---|---|---|
| Yangon Pan Pacific Hotel, Myanmar<br>仰光泛太平洋酒店 | HK-1410 | 09 October, 2015 | **F-101** |

| | | | |
|---|---|---|---|
| **Description**<br>項目說明 | Motorized Blackout Roller Blind @All Rooms<br>電動遮光捲簾<br>(所有客房) | | |
| **Location**<br>位置 | Deluxe King & Deluxe HW Twin Guestrooms<br>標準大床房及標準雙拼床房 | | |
| **Issue Stage**<br>發送階段 | Tender Package<br>招標階段 | | |
| **Rev. #**<br>修訂 | 1st | **Total Page**<br>總頁碼 | 1 |
| **Revision Date**<br>修改日期 | 31 March 2016 | | |
| **DETAIL SPECIFICATION \| 詳細內容** | | | |
| **Finish**<br>飾面 | | | |
| **Dimension**<br>尺寸（mm） | 寬 (W)<br>深 (D)<br>高 (H)<br>坐高 (SH) | check on site<br>按現場呎吋 | |
| **Qty.**<br>數量 | Verify | | |
| **Dwg. Ref**<br>圖號 | | | |
| **Manufacturer**<br>生產商 | | | |
| **Order Ref.**<br>訂貨編號 | | | |
| **Supplier**<br>供應商 | | | |
| **Contact**<br>聯繫人 | | | |
| **Phone**<br>電話 | | | |
| **Fax**<br>傳真 | | | |
| **Email**<br>電郵 | | | |
| **Remark(s)**<br>其他 | | | |

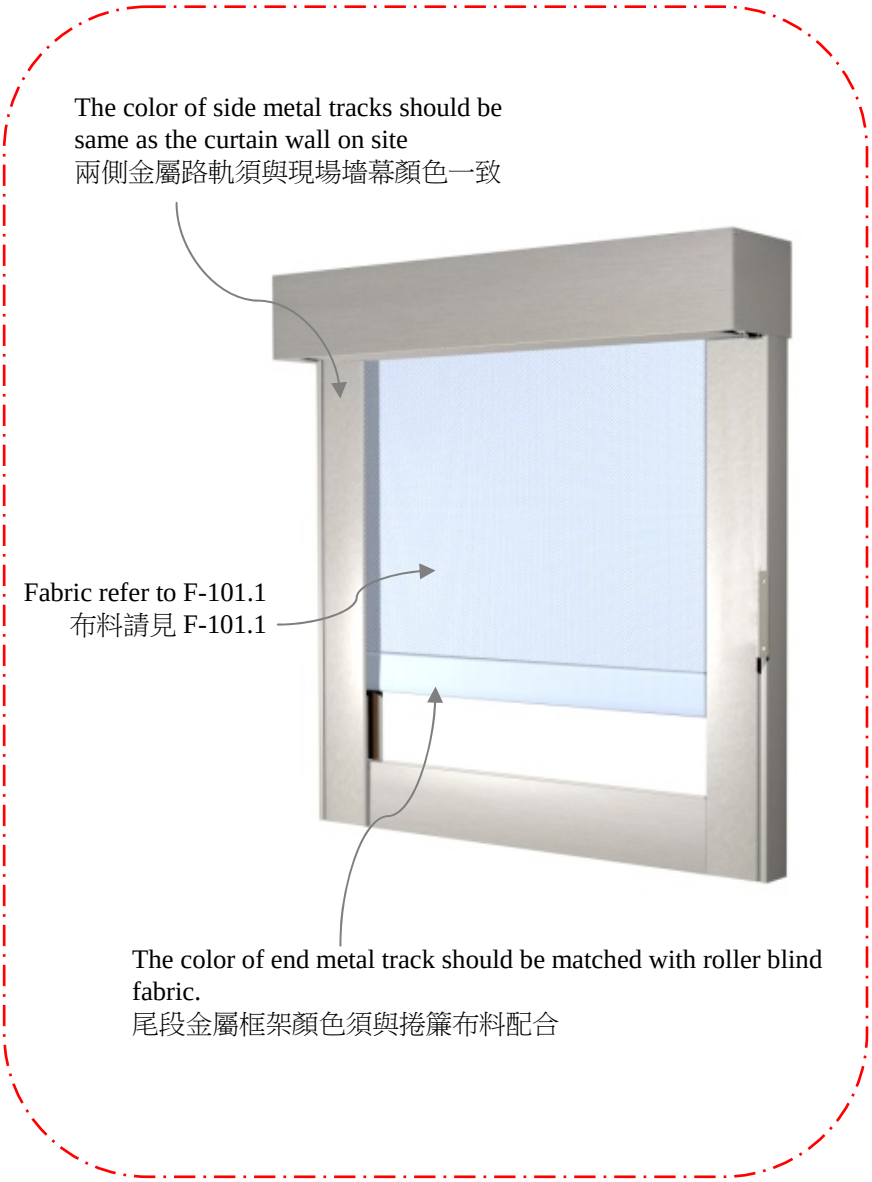


- Please refer to Ironmongery Spec I-101 for System.
- 電動系統請參照五金檔案 I-101.

**NOTE (S) | 備註**

This drawing is for reference. All dimensions should be verified by the Contractor on site. This should be made in conjunction with the Design's specification and conditions of the contract. This drawing is the property of Cheng Chung Design (HK) Ltd. and is not to be reproduced without the Designer's consent.
圖片只作參考之用承辦商必須以地盤尺寸為准。
必須依設計師所訂樣版及尺寸為准。圖片屬於 CCD 未經准許不得翻印。
1.材料須保證品質並符合大量施工需要；2.承建商應提供實物樣板供設計師認可；
3.承建商必須提前預測材料定貨期事宜；4.如需替換同類其他品牌材料，需承建方提供同類品牌樣品供設計方重新確定；
5.承辦商或制造商必須提供深化圖給設計師作最終確認方可下單或生產；

# LOOSE FURNITURE SPECIFICATION
# 活動傢具圖表

CCD
ChengChung Design

| PROJECT \| 項目名稱 | PROJ. # \| 項目編號 | ISSUE DATE \| 發送日期 | |
|---|---|---|---|
| Yangon Pan Pacific Hotel, Myanmar<br>仰光泛太平洋酒店 | HK-1410 | 09 October, 2015 | **F-102L** |

| | | | |
|---|---|---|---|
| **Description**<br>項目說明 | Sofa (Arm on Left)<br>沙發(左邊扶手)<br>(DK1. DK2A Typical) | | |
| **Location**<br>位置 | Deluxe King & Deluxe HW Twin Guestrooms<br>標準大床房及標準雙拼床房 | | |
| **Issue Stage**<br>發送階段 | Tender Package<br>招標階段 | | |
| **Rev. #**<br>修訂 | 2nd | **Total Page**<br>總頁碼 | 3 |
| **Revision Date**<br>修改日期 | 01 December 2015<br>31 March 2016 | | |
| **DETAIL SPECIFICATION \| 詳細內容** | | | |
| **Finish**<br>飾面 | | | |
| **Dimension**<br>尺寸（mm） | 寬 (W)<br>深 (D)<br>高 (H)<br>坐高 (SH) | 1650mm<br>880mm<br>700mm<br>430mm | |
| **Qty.**<br>數量 | Verify | | |
| **Dwg. Ref**<br>圖號 | | | |
| **Manufacturer**<br>生產商 | | | |
| **Order Ref.**<br>訂貨編號 | | | |
| **Supplier**<br>供應商 | By Furniture Contractor<br>由傢俱承建商負責 | | |
| **Contact**<br>聯繫人 | | | |
| **Phone**<br>電話 | | | |
| **Fax**<br>傳真 | | | |
| **Email**<br>電郵 | | | |
| **Remark(s)**<br>其他 | Furniture Contractor should be provided shop drawing to CCD.<br>廠家須提供施工圖紙給 CCD 批核 | | |

**NOTE (S) | 備註**

This drawing is for reference. All dimensions should be verified by the Contractor on site. This should be made in conjunction with the Design's specification and conditions of the contract. This drawing is the property of Cheng Chung Design (HK) Ltd. and is not to be reproduced without the Designer's consent.

圖片只作參考之用承辦商必須以地盤尺寸為准。

必須依設計師所訂樣版及尺寸為准。圖片屬於 CCD 未經准許不得翻印。

1.材料須保證品質並符合大量施工需要；2.承建商應提供實物樣板供設計師認可；

3.承建商必須提前預測材料定貨期事宜；4.如需替換同類其他品牌材料，需承建方提供同類品牌樣品供設計方重新確定；

5.承辦商或制造商必須提供深化圖給設計師作最終確認方可下單或生產；

# LOOSE FURNITURE SPECIFICATION
# 活動傢具圖表

CCD
ChengChung Design

| PROJECT \| 項目名稱 | PROJ. # \| 項目編號 | ISSUE DATE \| 發送日期 | |
|---|---|---|---|
| Yangon Pan Pacific Hotel, Myanmar<br>仰光泛太平洋酒店 | HK-1410 | 09 October, 2015 | **F-102L** |

| | | | |
|---|---|---|---|
| **Description**<br>項目說明 | Sofa Cushion A<br>沙發抱枕 A | | |
| **Location**<br>位置 | Deluxe King & Deluxe HW Twin Guestrooms<br>標準大床房及標準雙拼床房 | | |
| **Issue Stage**<br>發送階段 | Tender Package<br>招標階段 | | |
| **Rev. #**<br>修訂 | 2nd | **Total Page**<br>總頁碼 | 3 |
| **Revision Date**<br>修改日期 | 01 December 2015<br>31 March 2016 | | |
| **DETAIL SPECIFICATION \| 詳細內容** | | | |
| **Finish**<br>飾面 | | | |
| **Dimension**<br>尺寸（mm） | 寬 (W)<br>深 (D)<br>高 (H)<br>坐高 (SH) | 500mm<br>150mm<br>500mm | |
| **Qty.**<br>數量 | 1 * Verify | | |
| **Dwg. Ref**<br>圖號 | | | |
| **Manufacturer**<br>生產商 | | | |
| **Order Ref.**<br>訂貨編號 | | | |
| **Supplier**<br>供應商 | By Furniture Contractor<br>由傢俱承建商負責 | | |
| **Contact**<br>聯繫人 | | | |
| **Phone**<br>電話 | | | |
| **Fax**<br>傳真 | | | |
| **Email**<br>電郵 | | | |
| **Remark(s)**<br>其他 | Furniture Contractor should be provided shop drawing to CCD.<br>廠家須提供施工圖紙給 CCD 批核 | | |

**F-102 A**

Fabric refer to F-102A.1
布料請見 F-102A.1

Ø6mm piping fabric refer to F-102A.1
Ø6mm 管線布料請見 F-102A.1

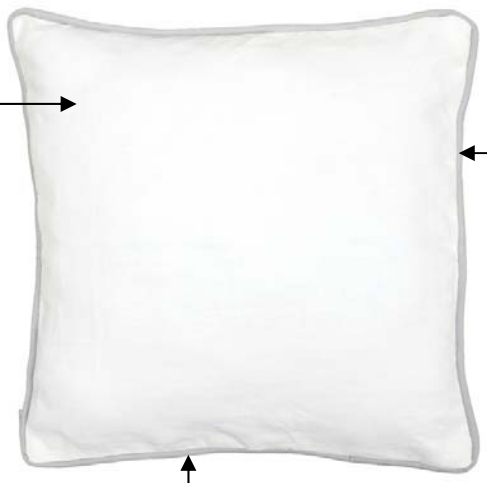

Hidden zipper color to match cushion fabric
隱藏式拉鏈顏色須與抱枕布料配合

- 1 Cushion per sofa.
- 每沙發有 1 個抱枕.
- Individual fabric pillowcase is needed of cushion insert.
- 枕芯須有獨立內套.

**NOTE (S) | 備註**

This drawing is for reference. All dimensions should be verified by the Contractor on site. This should be made in conjunction with the Design's specification and conditions of the contract. This drawing is the property of Cheng Chung Design (HK) Ltd. and is not to be reproduced without the Designer's consent.
圖片只作參考之用承辦商必須以地盤尺寸為准。
必須依設計師所訂樣版及尺寸為准。圖片屬於 CCD 未經准許不得翻印。
1.材料須保證品質並符合大量施工需要；2.承建商應提供實物樣板供設計師認可；
3.承建商必須提前預測材料定貨期事宜；4.如需替換同類其他品牌材料，需承建方提供同類品牌樣品供設計方重新確定；
5.承辦商或制造商必須提供深化圖給設計師作最終確認方可下單或生產；

# LOOSE FURNITURE SPECIFICATION
# 活動傢具圖表

CCD
ChengChung Design

| PROJECT \| 項目名稱 | PROJ. # \| 項目編號 | ISSUE DATE \| 發送日期 | |
|---|---|---|---|
| Yangon Pan Pacific Hotel, Myanmar<br>仰光泛太平洋酒店 | HK-1410 | 09 October, 2015 | **F-102L** |

| | | | |
|---|---|---|---|
| **Description**<br>項目說明 | Sofa Cushion B<br>沙發抱枕 B | | |
| **Location**<br>位置 | Deluxe King & Deluxe HW Twin Guestrooms<br>標準大床房及標準雙拼床房 | | |
| **Issue Stage**<br>發送階段 | Tender Package<br>招標階段 | | |
| **Rev. #**<br>修訂 | 2nd | **Total Page**<br>總頁碼 | 3 |
| **Revision Date**<br>修改日期 | 01 December 2015<br>31 March 2016 | | |
| **DETAIL SPECIFICATION \| 詳細內容** | | | |
| **Finish**<br>飾面 | | | |
| **Dimension**<br>尺寸（mm） | 寬 (W)<br>深 (D)<br>高 (H)<br>坐高 (SH) | 500mm<br>150mm<br>500mm | |
| **Qty.**<br>數量 | 1 * Verify | | |
| **Dwg. Ref**<br>圖號 | | | |
| **Manufacturer**<br>生產商 | | | |
| **Order Ref.**<br>訂貨編號 | | | |
| **Supplier**<br>供應商 | By Furniture Contractor<br>由傢俱承建商負責 | | |
| **Contact**<br>聯繫人 | | | |
| **Phone**<br>電話 | | | |
| **Fax**<br>傳真 | | | |
| **Email**<br>電郵 | | | |
| **Remark(s)**<br>其他 | Furniture Contractor should be provided shop drawing to CCD.<br>廠家須提供施工圖紙給 CCD 批核 | | |

**F-102 B**

Fabric refer to F-102B.1
布料請見 F-102B.1

Ø6mm piping fabric refer to F-102B.1
Ø6mm 管線布料請見 F-102B.1

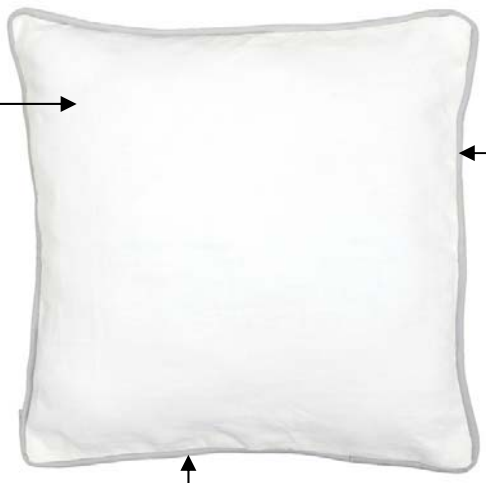

Hidden zipper color to match cushion fabric
隱藏式拉鏈顏色須與抱枕布料配合

- 1 Cushion per sofa.
- 每沙發有 1 個抱枕.
- Individual fabric pillowcase is needed of cushion insert.
- 枕心須有獨立內套.

**NOTE (S) | 備註**

This drawing is for reference. All dimensions should be verified by the Contractor on site. This should be made in conjunction with the Design's specification and conditions of the contract. This drawing is the property of Cheng Chung Design (HK) Ltd. and is not to be reproduced without the Designer's consent.
圖片只作參考之用承辦商必須以地盤尺寸為准。
必須依設計師所訂樣版及尺寸為准。圖片屬於 CCD 未經准許不得翻印。
1.材料須保證品質並符合大量施工需要；2.承建商應提供實物樣板供設計師認可；
3.承建商必須提前預測材料定貨期事宜；4.如需替換同類其他品牌材料，需承建方提供同類品牌樣品供設計方重新確定；
5.承辦商或制造商必須提供深化圖給設計師作最終確認方可下單或生產；

# LOOSE FURNITURE SPECIFICATION
# 活動傢具圖表

CCD
ChengChung Design

| PROJECT \| 項目名稱 | PROJ. # \| 項目編號 | ISSUE DATE \| 發送日期 | |
|---|---|---|---|
| Yangon Pan Pacific Hotel, Myanmar<br>仰光泛太平洋酒店 | HK-1410 | 09 October, 2015 | **F-102R** |

| | | | |
|---|---|---|---|
| **Description**<br>項目說明 | Sofa (Arm on Right)<br>沙發(右邊扶手)<br>(DK1. DK2A Typical) | | |
| **Location**<br>位置 | Deluxe King & Deluxe HW Twin Guestrooms<br>標準大床房及標準雙拼床房 | | |
| **Issue Stage**<br>發送階段 | Tender Package<br>招標階段 | | |
| **Rev. #**<br>修訂 | 2nd | **Total Page**<br>總頁碼 | 3 |
| **Revision Date**<br>修改日期 | 01 December 2015<br>31 March 2016 | | |
| **DETAIL SPECIFICATION \| 詳細內容** | | | |
| **Finish**<br>飾面 | | | |
| **Dimension**<br>尺寸（mm） | 寬 (W)<br>深 (D)<br>高 (H)<br>坐高 (SH) | 1650mm<br>880mm<br>700mm<br>430mm | |
| **Qty.**<br>數量 | Verify | | |
| **Dwg. Ref**<br>圖號 | | | |
| **Manufacturer**<br>生產商 | | | |
| **Order Ref.**<br>訂貨編號 | | | |
| **Supplier**<br>供應商 | By Furniture Contractor<br>由傢俱承建商負責 | | |
| **Contact**<br>聯繫人 | | | |
| **Phone**<br>電話 | | | |
| **Fax**<br>傳真 | | | |
| **Email**<br>電郵 | | | |
| **Remark(s)**<br>其他 | Furniture Contractor should be provided shop drawing to CCD.<br>廠家須提供施工圖紙給 CCD 批核 | | |

Fabric refer to F-102.1
布料請見 F-102.1

Dark Rosewood Solid Wooden Base (Natural Finish)
深色檀木實木底座

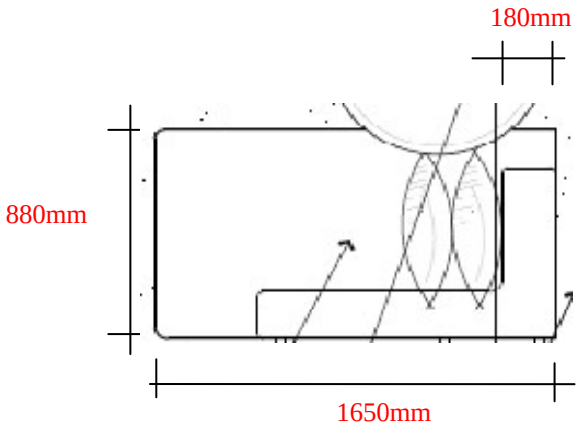


**NOTE (S) | 備註**

This drawing is for reference. All dimensions should be verified by the Contractor on site. This should be made in conjunction with the Design's specification and conditions of the contract. This drawing is the property of Cheng Chung Design (HK) Ltd. and is not to be reproduced without the Designer's consent.
圖片只作參考之用承辦商必須以地盤尺寸為准。
必須依設計師所訂樣版及尺寸為准。圖片屬於 CCD 未經准許不得翻印。
1.材料須保證品質並符合大量施工需要；2.承建商應提供實物樣板供設計師認可；
3.承建商必須提前預測材料定貨期事宜；4.如需替換同類其他品牌材料，需承建方提供同類品牌樣品供設計方重新確定；
5.承辦商或制造商必須提供深化圖給設計師作最終確認方可下單或生產；

# LOOSE FURNITURE SPECIFICATION
# 活動傢具圖表

| PROJECT \| 項目名稱 | PROJ. # \| 項目編號 | ISSUE DATE \| 發送日期 | |
|---|---|---|---|
| Yangon Pan Pacific Hotel, Myanmar<br>仰光泛太平洋酒店 | HK-1410 | 09 October, 2015 | **F-102R** |

| | | | |
|---|---|---|---|
| **Description**<br>項目說明 | Sofa Cushion A<br>沙發抱枕 A | | |
| **Location**<br>位置 | Deluxe King & Deluxe HW Twin Guestrooms<br>標準大床房及標準雙拼床房 (DK1, DK2A) | | |
| **Issue Stage**<br>發送階段 | Tender Package<br>招標階段 | | |
| **Rev. #**<br>修訂 | 2nd | **Total Page**<br>總頁碼 | 3 |
| **Revision Date**<br>修改日期 | 01 December 2015<br>31 March 2016 | | |
| **DETAIL SPECIFICATION \| 詳細內容** | | | |
| **Finish**<br>飾面 | | | |
| **Dimension**<br>尺寸（mm） | 寬 (W)<br>深 (D)<br>高 (H)<br>坐高 (SH) | 500mm<br>150mm<br>500mm | |
| **Qty.**<br>數量 | 1* Verify | | |
| **Dwg. Ref**<br>圖號 | | | |
| **Manufacturer**<br>生產商 | | | |
| **Order Ref.**<br>訂貨編號 | | | |
| **Supplier**<br>供應商 | By Furniture Contractor<br>由傢俱承建商負責 | | |
| **Contact**<br>聯繫人 | | | |
| **Phone**<br>電話 | | | |
| **Fax**<br>傳真 | | | |
| **Email**<br>電郵 | | | |
| **Remark(s)**<br>其他 | Furniture Contractor should be provided shop drawing to CCD.<br>廠家須提供施工圖紙給 CCD 批核 | | |

**F-102 A**

Fabric refer to F-102A.1
布料請見 F-102A.1

Ø6mm piping fabric refer to F-102A.1
Ø6mm 管線布料請見 F-102A.1

Hidden zipper color to match cushion fabric
隱藏式拉鏈顏色須與抱枕布料配合

- 1 Cushion per sofa.
- 每沙發有 1 個抱枕.
- Individual fabric pillowcase is needed of cushion insert.
- 枕芯須有獨立內套.

**NOTE (S) | 備註**

This drawing is for reference. All dimensions should be verified by the Contractor on site. This should be made in conjunction with the Design's specification and conditions of the contract. This drawing is the property of Cheng Chung Design (HK) Ltd. and is not to be reproduced without the Designer's consent.
圖片只作參考之用承辦商必須以地盤尺寸為准。
必須依設計師所訂樣版及尺寸為准。圖片屬於 CCD 未經准許不得翻印。
1.材料須保證品質並符合大量施工需要；2.承建商應提供實物樣板供設計師認可；
3.承建商必須提前預測材料定貨期事宜；4.如需替換同類其他品牌材料，需承建方提供同類品牌樣品供設計方重新確定；
5.承辦商或制造商必須提供深化圖給設計師作最終確認方可下單或生產；

# LOOSE FURNITURE SPECIFICATION
# 活動傢具圖表

| PROJECT \| 項目名稱 | PROJ. # \| 項目編號 | ISSUE DATE \| 發送日期 | |
|---|---|---|---|
| Yangon Pan Pacific Hotel, Myanmar<br>仰光泛太平洋酒店 | HK-1410 | 09 October, 2015 | **F-102R** |

| | | | |
|---|---|---|---|
| **Description**<br>項目說明 | Sofa Cushion B<br>沙發抱枕 B | | |
| **Location**<br>位置 | Deluxe King & Deluxe HW Twin Guestrooms<br>標準大床房及標準雙拼床房 (DK1, DK2A) | | |
| **Issue Stage**<br>發送階段 | Tender Package<br>招標階段 | | |
| **Rev. #**<br>修訂 | 2nd | **Total Page**<br>總頁碼 | 3 |
| **Revision Date**<br>修改日期 | 01 December 2015<br>31 March 2016 | | |
| **DETAIL SPECIFICATION \| 詳細內容** | | | |
| **Finish**<br>飾面 | | | |
| **Dimension**<br>尺寸（mm） | 寬 (W)<br>深 (D)<br>高 (H)<br>坐高 (SH) | 500mm<br>150mm<br>500mm | |
| **Qty.**<br>數量 | 1* Verify | | |
| **Dwg. Ref**<br>圖號 | | | |
| **Manufacturer**<br>生產商 | | | |
| **Order Ref.**<br>訂貨編號 | | | |
| **Supplier**<br>供應商 | By Furniture Contractor<br>由傢俱承建商負責 | | |
| **Contact**<br>聯繫人 | | | |
| **Phone**<br>電話 | | | |
| **Fax**<br>傳真 | | | |
| **Email**<br>電郵 | | | |
| **Remark(s)**<br>其他 | Furniture Contractor should be provided shop drawing to CCD.<br>廠家須提供施工圖紙給 CCD 批核 | | |

**F-102 B**

Fabric refer to F-102B.1
布料請見 F-102B.1

Ø6mm piping fabric refer to F-102B.1
Ø6mm 管線布料請見 F-102B.1

Hidden zipper color to match cushion fabric
隱藏式拉鏈顏色須與抱枕布料配合

- 1 Cushion per sofa.
- 每沙發有 1 個抱枕.
- Individual fabric pillowcase is needed of cushion insert.
- 枕心須有獨立內套.

**NOTE (S) | 備註**

This drawing is for reference. All dimensions should be verified by the Contractor on site. This should be made in conjunction with the Design's specification and conditions of the contract. This drawing is the property of Cheng Chung Design (HK) Ltd. and is not to be reproduced without the Designer's consent.
圖片只作參考之用承辦商必須以地盤尺寸為准。
必須依設計師所訂樣版及尺寸為准。圖片屬於 CCD 未經准許不得翻印。
1.材料須保證品質並符合大量施工需要；2.承建商應提供實物樣板供設計師認可；
3.承建商必須提前預測材料定貨期事宜；4.如需替換同類其他品牌材料，需承建方提供同類品牌樣品供設計方重新確定；
5.承辦商或制造商必須提供深化圖給設計師作最終確認方可下單或生產；

# LOOSE FURNITURE SPECIFICATION
# 活動傢具圖表

CCD
ChengChung Design

| PROJECT \| 項目名稱 | PROJ. # \| 項目編號 | ISSUE DATE \| 發送日期 | |
|---|---|---|---|
| Yangon Pan Pacific Hotel, Myanmar<br>仰光泛太平洋酒店 | HK-1410 | 09 October, 2015 | **F-103** |

| | | | |
|---|---|---|---|
| **Description**<br>項目說明 | Round Breakfast Table<br>圓形早餐桌<br>(DK1, DK2A Typical, DK2B DHWT) | | |
| **Location**<br>位置 | Deluxe King & Deluxe HW Twin Guestrooms<br>標準大床房及標準雙拼床房 | | |
| **Issue Stage**<br>發送階段 | Tender Package<br>招標階段 | | |
| **Rev. #**<br>修訂 | 2nd | **Total Page**<br>總頁碼 | 1 |
| **Revision Date**<br>修改日期 | 01 December 2015<br>31 March, 2016 | | |
| **DETAIL SPECIFICATION \| 詳細內容** | | | |
| **Finish**<br>飾面 | | | |
| **Dimension**<br>尺寸（mm） | 寬 (W)<br>深 (D)<br>高 (H)<br>坐高 (SH) | Ø800mm<br><br>700mm | |
| **Qty.**<br>數量 | Verify | | |
| **Dwg. Ref**<br>圖號 | | | |
| **Manufacturer**<br>生產商 | | | |
| **Order Ref.**<br>訂貨編號 | | | |
| **Supplier**<br>供應商 | By Furniture Contractor<br>由傢俱承建商負責 | | |
| **Contact**<br>聯繫人 | | | |
| **Phone**<br>電話 | | | |
| **Fax**<br>傳真 | | | |
| **Email**<br>電郵 | | | |
| **Remark(s)**<br>其他 | Furniture Contractor should be provided shop drawing to CCD.<br>廠家須提供施工圖紙給 CCD 批核 | | |

White Sandstone inserted into table with a tempered super white clear glass on top flat to the table frame. Frame 40mm(W)
桌面中央位置嵌入白沙石石材面放超白強化清玻璃平桌面圍邊 40mm(W)

Dark Rosewood Solid Wood
深色檀木實

Add a solid wooden base
增加一個實木木底板

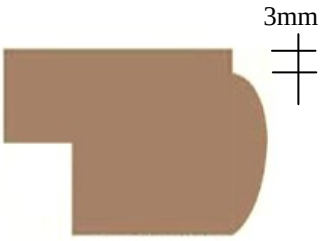


Dupont Table Edge
桌邊花圍邊

NOTE (S) | 備註

This drawing is for reference. All dimensions should be verified by the Contractor on site. This should be made in conjunction with the Design's specification and conditions of the contract. This drawing is the property of Cheng Chung Design (HK) Ltd. and is not to be reproduced without the Designer's consent.
圖片只作參考之用承辦商必須以地盤尺寸為准。
必須依設計師所訂樣版及尺寸為准。圖片屬於 CCD 未經准許不得翻印。
1.材料須保證品質並符合大量施工需要；2.承建商應提供實物樣板供設計師認可；
3.承建商必須提前預測材料定貨期事宜；4.如需替換同類其他品牌材料，需承建方提供同類品牌樣品供設計方重新確定；
5.承辦商或制造商必須提供深化圖給設計師作最終確認方可下單或生產；

# LOOSE FURNITURE SPECIFICATION
# 活動傢具圖表

CCD
ChengChung Design

| PROJECT \| 項目名稱 | PROJ. # \| 項目編號 | ISSUE DATE \| 發送日期 | |
|---|---|---|---|
| Yangon Pan Pacific Hotel, Myanmar<br>仰光泛太平洋酒店 | HK-1410 | 09 October, 2015 | **F-104** |

| | | | |
|---|---|---|---|
| **Description**<br>項目說明 | Desk Chair @All Rooms<br>書椅(所有客房) | | |
| **Location**<br>位置 | Deluxe King & Deluxe HW Twin Guestrooms<br>標準大床房及標準雙拼床房 | | |
| **Issue Stage**<br>發送階段 | Tender Package<br>招標階段 | | |
| **Rev. #**<br>修訂 | 1st | **Total Page**<br>總頁碼 | 1 |
| **Revision Date**<br>修改日期 | 31 March 2016 | | |
| **DETAIL SPECIFICATION \| 詳細內容** | | | |
| **Finish**<br>飾面 | | | |
| **Dimension**<br>尺寸（mm） | 寬 (W)<br>深 (D)<br>高 (H)<br>坐高 (SH) | 622mm<br><br>970mm<br>405-545mm | |
| **Qty.**<br>數量 | Verify | | |
| **Dwg. Ref**<br>圖號 | | | |
| **Manufacturer**<br>生產商 | Herman Miller | | |
| **Order Ref.**<br>訂貨編號 | Caper Multipurpose Chair | | |
| **Supplier**<br>供應商 | Herman Miller | | |
| **Contact**<br>聯繫人 | Ms. Liv Lee | | |
| **Phone**<br>電話 | (852) 3580 0496 | | |
| **Fax**<br>傳真 | | | |
| **Email**<br>電郵 | | | |
| **Remark(s)**<br>其他 | | | |

- Metallic Silver Frame Finish 金屬銀支架
- Stationary Arms 帶有扶手
- Fog Arm and Arm Cap Finish 霧灰色扶手
- FLEXNET Seat – Silver Grey 銀灰色布料座墊
- Cappuccino Seat and Back 泡沫咖啡色系座墊框架及背部
- Carpet Casters 使用易於地毯上滑行之腳輪

**NOTE (S) | 備註**

This drawing is for reference. All dimensions should be verified by the Contractor on site. This should be made in conjunction with the Design's specification and conditions of the contract. This drawing is the property of Cheng Chung Design (HK) Ltd. and is not to be reproduced without the Designer's consent.

圖片只作參考之用承辦商必須以地盤尺寸為准。

必須依設計師所訂樣版及尺寸為准。圖片屬於 CCD 未經准許不得翻印。

1.材料須保證品質並符合大量施工需要；2.承建商應提供實物樣板供設計師認可；

3.承建商必須提前預測材料定貨期事宜；4.如需替換同類其他品牌材料，需承建方提供同類品牌樣品供設計方重新確定；

5.承辦商或制造商必須提供深化圖給設計師作最終確認方可下單或生產；

# LOOSE FURNITURE SPECIFICATION
# 活動傢具圖表

CCD
ChengChung Design

| PROJECT \| 項目名稱 | PROJ. # \| 項目編號 | ISSUE DATE \| 發送日期 | |
|---|---|---|---|
| Yangon Pan Pacific Hotel, Myanmar<br>仰光泛太平洋酒店 | HK-1410 | 30 June, 2015 | **F-105** |

| | | | |
|---|---|---|---|
| **Description**<br>項目說明 | King Bed<br>大床<br>(All DK1 & DK2A) | | |
| **Location**<br>位置 | Deluxe King & Deluxe HW Twin Guestrooms<br>標準大床房及標準雙拼床房 | | |
| **Issue Stage**<br>發送階段 | Tender Package<br>招標階段 | | |
| **Rev. #**<br>修訂 | 2nd | **Total Page**<br>總頁碼 | 2 |
| **Revision Date**<br>修改日期 | 1 December, 2015<br>31 March, 2016 | | |
| **DETAIL SPECIFICATION \| 詳細內容** | | | |
| **Finish**<br>飾面 | | | |
| **Dimension**<br>尺寸（mm） | 寬 (W)<br>深 (D)<br>高 (H)<br>坐高 (SH) | 1980mm<br>2030mm<br>680mm | |
| **Qty.**<br>數量 | 1 Set | | |
| **Dwg. Ref**<br>圖號 | | | |
| **Manufacturer**<br>生產商 | | | |
| **Order Ref.**<br>訂貨編號 | | | |
| **Supplier**<br>供應商 | By Furniture Contractor<br>由傢俱承建商負責 | | |
| **Contact**<br>聯繫人 | | | |
| **Phone**<br>電話 | | | |
| **Fax**<br>傳真 | | | |
| **Email**<br>電郵 | | | |
| **Remark(s)**<br>其他 | Furniture Contractor should be provided shop drawing to CCD.<br>廠家須提供施工圖紙給 CCD 批核 | | |

Decorative Bed Throw
床上裝飾布條 (2800W x 500L)

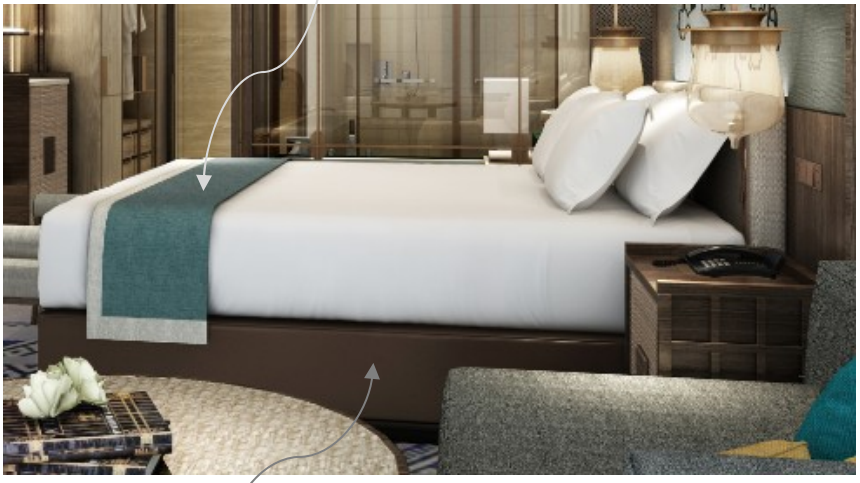

Bed Box Frame Vinyl Cover refer to F-105.1
Cover – elastic runs around all 4 sides.
床架仿皮革套請見 F-105.1
皮套圍邊有可拆式申縮性橡筋包邊

Double stitching on the vinyl cover at the corner edge
皮套於轉角位置須用雙車縫線拼接

- King Bed Mattress : 1980W x 2030L x 330H (mm)
- Overall Bed Buildup Height : ±680mm
- 大床床墊：1980W x 2030L x 330H (mm)
- 床完成面總高：±680mm

**NOTE (S) | 備註**

This drawing is for reference. All dimensions should be verified by the Contractor on site. This should be made in conjunction with the Design's specification and conditions of the contract. This drawing is the property of Cheng Chung Design (HK) Ltd. and is not to be reproduced without the Designer's consent.
圖片只作參考之用承辦商必須以地盤尺寸為准。
必須依設計師所訂樣版及尺寸為准。圖片屬於 CCD 未經准許不得翻印。
1.材料須保證品質並符合大量施工需要；2.承建商應提供實物樣板供設計師認可；
3.承建商必須提前預測材料定貨期事宜；4.如需替換同類其他品牌材料，需承建方提供同類品牌樣品供設計方重新確定；
5.承辦商或制造商必須提供深化圖給設計師作最終確認方可下單或生產；

# LOOSE FURNITURE SPECIFICATION
# 活動傢具圖表

| PROJECT \| 項目名稱 | PROJ. # \| 項目編號 | ISSUE DATE \| 發送日期 | |
|---|---|---|---|
| Yangon Pan Pacific Hotel, Myanmar<br>仰光泛太平洋酒店 | HK-1410 | 30 June, 2015 | **F-105** |

| | | | |
|---|---|---|---|
| 項目說明 | King Bed<br>大床<br>(All DK1 & DK2A) | | |
| **Location**<br>位置 | Deluxe King & Deluxe HW Twin Guestrooms<br>標準大床房及標準雙拼床房 | | |
| **Issue Stage**<br>發送階段 | Tender Package<br>招標階段 | | |
| **Rev. #**<br>修訂 | 2nd | **Total Page**<br>總頁碼 | 2 |
| **Revision Date**<br>修改日期 | 17 July, 2015<br>15 March, 2016 | | |
| **DETAIL SPECIFICATION \| 詳細內容** | | | |
| **Finish**<br>飾面 | | | |
| **Dimension**<br>尺寸（mm） | 寬 (W)<br>深 (D)<br>高 (H)<br>坐高 (SH) | 1980mm<br>2030mm<br>680mm | |
| **Qty.**<br>數量 | 1 Set | | |
| **Dwg. Ref**<br>圖號 | | | |
| **Manufacturer**<br>生產商 | | | |
| **Order Ref.**<br>訂貨編號 | | | |
| **Supplier**<br>供應商 | By Furniture Contractor<br>由傢俱承建商負責 | | |
| **Contact**<br>聯繫人 | | | |
| **Phone**<br>電話 | | | |
| **Fax**<br>傳真 | | | |
| **Email**<br>電郵 | | | |
| **Remark(s)**<br>其他 | Furniture Contractor should be provided shop drawing to CCD.<br>廠家須提供施工圖紙給 CCD 批核 | | |

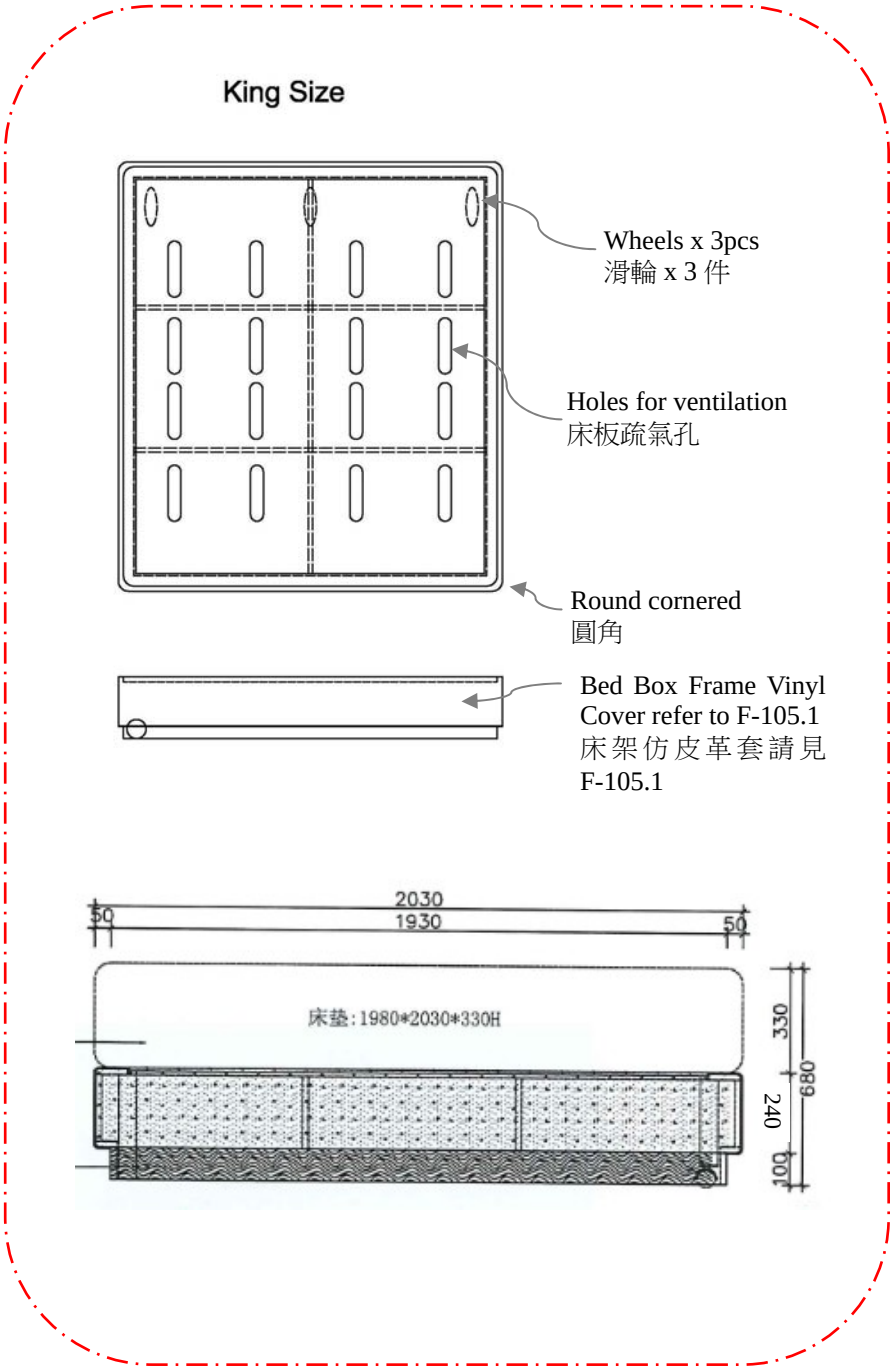


**NOTE (S) | 備註**

This drawing is for reference. All dimensions should be verified by the Contractor on site. This should be made in conjunction with the Design's specification and conditions of the contract. This drawing is the property of Cheng Chung Design (HK) Ltd. and is not to be reproduced without the Designer's consent.

圖片只作參考之用承辦商必須以地盤尺寸為准。

必須依設計師所訂樣版及尺寸為准。圖片屬於 CCD 未經准許不得翻印。

1.材料須保證品質並符合大量施工需要；2.承建商應提供實物樣板供設計師認可；

3.承建商必須提前預測材料定貨期事宜；4.如需替換同類其他品牌材料，需承建方提供同類品牌樣品供設計方重新確定；

5.承辦商或制造商必須提供深化圖給設計師作最終確認方可下單或生產；

# LOOSE FURNITURE SPECIFICATION
# 活動傢具圖表

| PROJECT \| 項目名稱 | PROJ. # \| 項目編號 | ISSUE DATE \| 發送日期 | |
|---|---|---|---|
| Yangon Pan Pacific Hotel, Myanmar<br>仰光泛太平洋酒店 | HK-1410 | 09 October, 2015 | **F-106** |

| | | | |
|---|---|---|---|
| **Description**<br>項目說明 | Night Stand<br>@ All Rooms<br>床頭柜(所有客房) | | |
| **Location**<br>位置 | Deluxe King & Deluxe HW Twin Guestrooms<br>標準大床房及標準雙拼床房 | | |
| **Issue Stage**<br>發送階段 | Tender Package<br>招標階段 | | |
| **Rev. #**<br>修訂 | 2nd | **Total Page**<br>總頁碼 | 1 |
| **Revision Date**<br>修改日期 | 01 December 2015<br>31 March 2016 | | |
| **DETAIL SPECIFICATION \| 詳細內容** | | | |
| **Finish**<br>飾面 | | | |
| **Dimension**<br>尺寸（mm） | 寬 (W)<br>深 (D)<br>高 (H)<br>坐高 (SH) | 530mm<br>400mm<br>680mm | |
| **Qty.**<br>數量 | Verify | | |
| **Dwg. Ref**<br>圖號 | | | |
| **Manufacturer**<br>生產商 | | | |
| **Order Ref.**<br>訂貨編號 | | | |
| **Supplier**<br>供應商 | By Furniture Contractor<br>由傢俱承建商負責 | | |
| **Contact**<br>聯繫人 | | | |
| **Phone**<br>電話 | | | |
| **Fax**<br>傳真 | | | |
| **Email**<br>電郵 | | | |
| **Remark(s)**<br>其他 | Furniture Contractor should be provided shop drawing to CCD.<br>廠家須提供施工圖紙給 CCD 批核 | | |

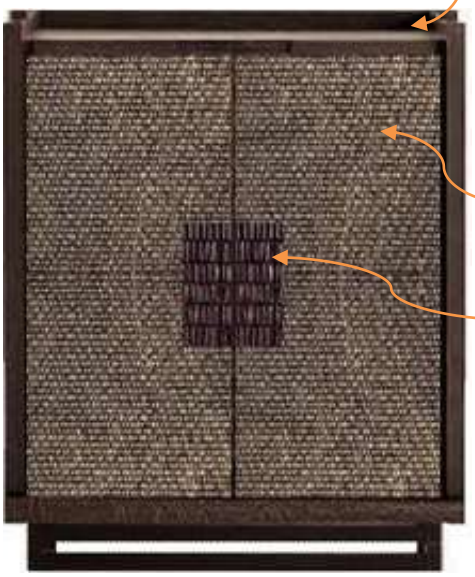

**NOTE (S) | 備註**

This drawing is for reference. All dimensions should be verified by the Contractor on site. This should be made in conjunction with the Design's specification and conditions of the contract. This drawing is the property of Cheng Chung Design (HK) Ltd. and is not to be reproduced without the Designer's consent.

圖片只作參考之用承辦商必須以地盤尺寸為准。

必須依設計師所訂樣版及尺寸為准。圖片屬於 CCD 未經准許不得翻印。

1.材料須保證品質並符合大量施工需要；2.承建商應提供實物樣板供設計師認可；

3.承建商必須提前預測材料定貨期事宜；4.如需替換同類其他品牌材料，需承建方提供同類品牌樣品供設計方重新確定；

5.承辦商或制造商必須提供深化圖給設計師作最終確認方可下單或生產；

# LOOSE FURNITURE SPECIFICATION
# 活動傢具圖表

CCD
ChengChung Design

| PROJECT \| 項目名稱 | PROJ. # \| 項目編號 | ISSUE DATE \| 發送日期 | |
|---|---|---|---|
| Yangon Pan Pacific Hotel, Myanmar<br>仰光泛太平洋酒店 | HK-1410 | 09 October, 2015 | **F-107** |

| | | | |
|---|---|---|---|
| **Description**<br>項目說明 | Dressing Mirror with Towel Rack @ Bathroom<br>梳妝鏡子連毛巾架(衛生間) (DK2A, DK2B) | | |
| **Location**<br>位置 | Deluxe King & Deluxe HW Twin Guestrooms<br>標準大床房及標準雙拼床房 | | |
| **Issue Stage**<br>發送階段 | Tender Package<br>招標階段 | | |
| **Rev. #**<br>修訂 | 1st | **Total Page**<br>總頁碼 | 1 |
| **Revision Date**<br>修改日期 | 31 March 2016 | | |
| **DETAIL SPECIFICATION \| 詳細內容** | | | |
| **Finish**<br>飾面 | | | |
| **Dimension**<br>尺寸（mm） | 寬 (W)<br>深 (D)<br>高 (H)<br>坐高 (SH) | 855mm<br>320mm<br>700mm | |
| **Qty.**<br>數量 | Verify | | |
| **Dwg. Ref**<br>圖號 | | | |
| **Manufacturer**<br>生產商 | | | |
| **Order Ref.**<br>訂貨編號 | | | |
| **Supplier**<br>供應商 | By Furniture Contractor<br>由傢俱承建商負責 | | |
| **Contact**<br>聯繫人 | | | |
| **Phone**<br>電話 | | | |
| **Fax**<br>傳真 | | | |
| **Email**<br>電郵 | | | |
| **Remark(s)**<br>其他 | Furniture Contractor should be provided shop drawing to CCD.<br>廠家須提供施工圖紙給 CCD 批核 | | |

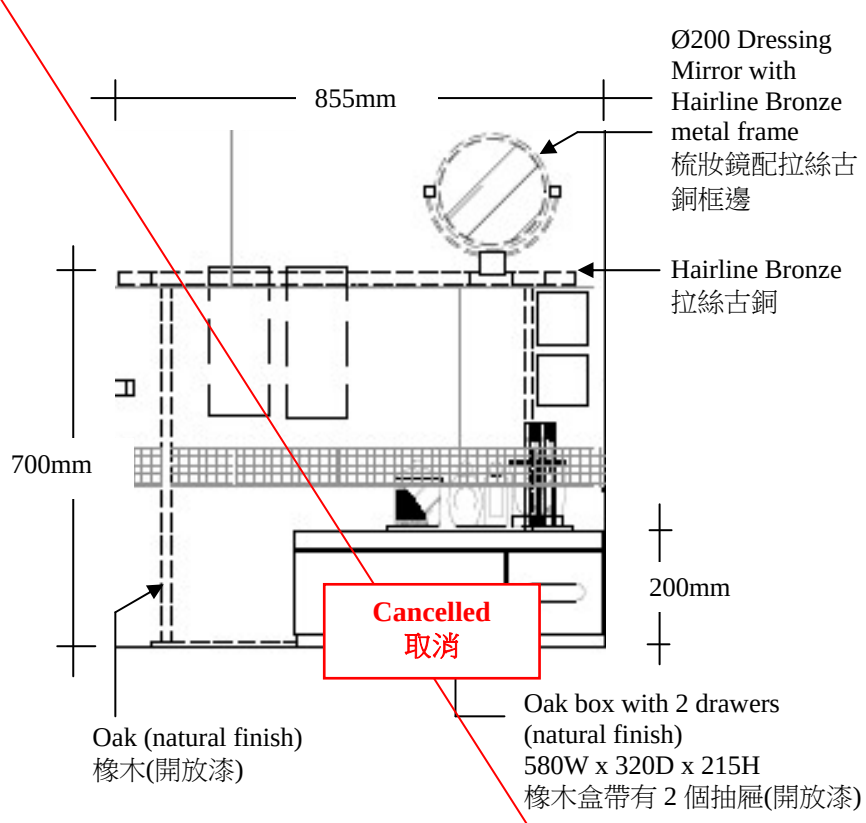

**NOTE (S) | 備註**

This drawing is for reference. All dimensions should be verified by the Contractor on site. This should be made in conjunction with the Design's specification and conditions of the contract. This drawing is the property of Cheng Chung Design (HK) Ltd. and is not to be reproduced without the Designer's consent.

圖片只作參考之用承辦商必須以地盤尺寸為准。

必須依設計師所訂樣版及尺寸為准。圖片屬於 CCD 未經准許不得翻印。

1.材料須保證品質並符合大量施工需要；2.承建商應提供實物樣板供設計師認可；

3.承建商必須提前預測材料定貨期事宜；4.如需替換同類其他品牌材料，需承建方提供同類品牌樣品供設計方重新確定；

5.承辦商或制造商必須提供深化圖給設計師作最終確認方可下單或生產；

# LOOSE FURNITURE SPECIFICATION
# 活動傢具圖表

| PROJECT \| 項目名稱 | PROJ. # \| 項目編號 | ISSUE DATE \| 發送日期 | |
|---|---|---|---|
| Yangon Pan Pacific Hotel, Myanmar<br>仰光泛太平洋酒店 | HK-1410 | 09 October, 2015 | **F-108** |

| | | | |
|---|---|---|---|
| **Description**<br>項目說明 | Floor Towel Rack (Large) @ Bathroom<br>地面毛巾架 (大) (衛生間) (DK2A, DK2B) | | |
| **Location**<br>位置 | Deluxe King & Deluxe HW Twin Guestrooms<br>標準大床房及標準雙拼床房 | | |
| **Issue Stage**<br>發送階段 | Tender Package<br>招標階段 | | |
| **Rev. #**<br>修訂 | 2nd | **Total Page**<br>總頁碼 | 1 |
| **Revision Date**<br>修改日期 | 01 December 2015<br>31 March 2016 | | |
| **DETAIL SPECIFICATION \| 詳細內容** | | | |
| **Finish**<br>飾面 | | | |
| **Dimension**<br>尺寸（mm） | 寬 (W)<br>深 (D)<br>高 (H)<br>坐高 (SH) | 925mm<br>300mm<br>200mm | |
| **Qty.**<br>數量 | Verify | | |
| **Dwg. Ref**<br>圖號 | | | |
| **Manufacturer**<br>生產商 | | | |
| **Order Ref.**<br>訂貨編號 | | | |
| **Supplier**<br>供應商 | By Furniture Contractor<br>由傢俱承建商負責 | | |
| **Contact**<br>聯繫人 | | | |
| **Phone**<br>電話 | | | |
| **Fax**<br>傳真 | | | |
| **Email**<br>電郵 | | | |
| **Remark(s)**<br>其他 | Furniture Contractor should be provided shop drawing to CCD.<br>廠家須提供施工圖紙給 CCD 批核 | | |

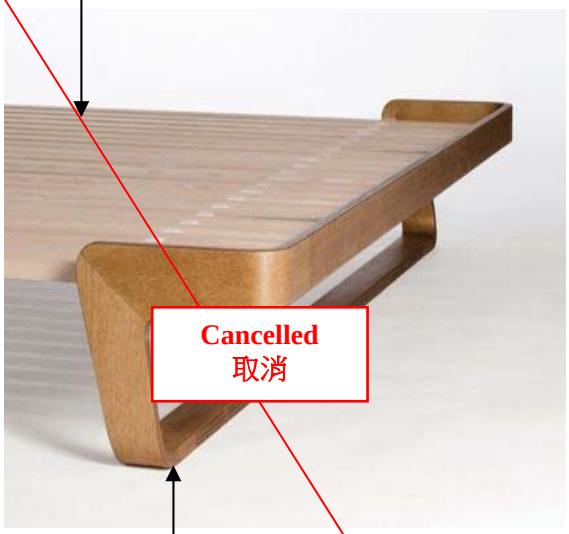


**NOTE (S) | 備註**

This drawing is for reference. All dimensions should be verified by the Contractor on site. This should be made in conjunction with the Design's specification and conditions of the contract. This drawing is the property of Cheng Chung Design (HK) Ltd. and is not to be reproduced without the Designer's consent.

圖片只作參考之用承辦商必須以地盤尺寸為准。

必須依設計師所訂樣版及尺寸為准。圖片屬於 CCD 未經准許不得翻印。

1.材料須保證品質並符合大量施工需要；2.承建商應提供實物樣板供設計師認可；

3.承建商必須提前預測材料定貨期事宜；4.如需替換同類其他品牌材料，需承建方提供同類品牌樣品供設計方重新確定；

5.承辦商或制造商必須提供深化圖給設計師作最終確認方可下單或生產；

# LOOSE FURNITURE SPECIFICATION
# 活動傢具圖表

CCD
ChengChung Design

| PROJECT \| 項目名稱 | PROJ. # \| 項目編號 | ISSUE DATE \| 發送日期 | |
|---|---|---|---|
| Yangon Pan Pacific Hotel, Myanmar<br>仰光泛太平洋酒店 | HK-1410 | 09 October, 2015 | **F-109a** |

| | | | |
|---|---|---|---|
| **Description**<br>項目說明 | Bed End Bench (Long)<br>床尾椅 (長)<br>(All DK2A) | | |
| **Location**<br>位置 | Deluxe King & Deluxe HW Twin Guestrooms<br>標準大床房及標準雙拼床房 | | |
| **Issue Stage**<br>發送階段 | Tender Package<br>招標階段 | | |
| **Rev. #**<br>修訂 | 2nd | **Total Page**<br>總頁碼 | 1 |
| **Revision Date**<br>修改日期 | 01 December 2015<br>31 March 2016 | | |
| **DETAIL SPECIFICATION \| 詳細內容** | | | |
| **Finish**<br>飾面 | | | |
| **Dimension**<br>尺寸 (mm) | 寬 (W)<br>深 (D)<br>高 (H)<br>坐高 (SH) | 1300mm<br>400mm<br>660mm<br>510mm | |
| **Qty.**<br>數量 | Verify | | |
| **Dwg. Ref**<br>圖號 | | | |
| **Manufacturer**<br>生產商 | | | |
| **Order Ref.**<br>訂貨編號 | | | |
| **Supplier**<br>供應商 | By Furniture Contractor<br>由傢俱承建商負責 | | |
| **Contact**<br>聯繫人 | | | |
| **Phone**<br>電話 | | | |
| **Fax**<br>傳真 | | | |
| **Email**<br>電郵 | | | |
| **Remark(s)**<br>其他 | Furniture Contractor should be provided shop drawing to CCD.<br>廠家須提供施工圖紙給 CCD 批核 | | |

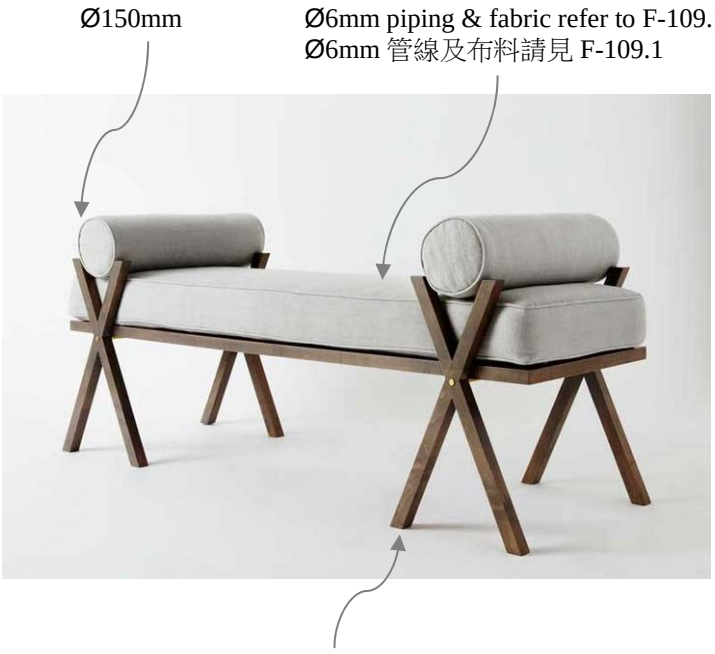

**NOTE (S) | 備註**

This drawing is for reference. All dimensions should be verified by the Contractor on site. This should be made in conjunction with the Design's specification and conditions of the contract. This drawing is the property of Cheng Chung Design (HK) Ltd. and is not to be reproduced without the Designer's consent.

圖片只作參考之用承辦商必須以地盤尺寸為准。

必須依設計師所訂樣版及尺寸為准。圖片屬於 CCD 未經准許不得翻印。

1.材料須保證品質並符合大量施工需要；2.承建商應提供實物樣板供設計師認可；

3.承建商必須提前預測材料定貨期事宜；4.如需替換同類其他品牌材料，需承建方提供同類品牌樣品供設計方重新確定；

5.承辦商或制造商必須提供深化圖給設計師作最終確認方可下單或生產；

# LOOSE FURNITURE SPECIFICATION
# 活動傢具圖表

CCD
ChengChung Design

| PROJECT \| 項目名稱 | PROJ. # \| 項目編號 | ISSUE DATE \| 發送日期 | |
|---|---|---|---|
| Yangon Pan Pacific Hotel, Myanmar<br>仰光泛太平洋酒店 | HK-1410 | 09 October, 2015 | **F-109b** |

| | | | |
|---|---|---|---|
| **Description**<br>項目說明 | Bed End Bench (Long)<br>床尾椅 (長)<br>(All DK2B) | | |
| **Location**<br>位置 | Deluxe King & Deluxe HW Twin Guestrooms<br>標準大床房及標準雙拼床房 | | |
| **Issue Stage**<br>發送階段 | Tender Package<br>招標階段 | | |
| **Rev. #**<br>修訂 | 2nd | **Total Page**<br>總頁碼 | 1 |
| **Revision Date**<br>修改日期 | 01 December 2015<br>31 March 2016 | | |
| **DETAIL SPECIFICATION \| 詳細內容** | | | |
| **Finish**<br>飾面 | | | |
| **Dimension**<br>尺寸 (mm) | 寬 (W)<br>深 (D)<br>高 (H)<br>坐高 (SH) | 1000mm<br>400mm<br>660mm<br>510mm | |
| **Qty.**<br>數量 | Verify | | |
| **Dwg. Ref**<br>圖號 | | | |
| **Manufacturer**<br>生產商 | | | |
| **Order Ref.**<br>訂貨編號 | | | |
| **Supplier**<br>供應商 | By Furniture Contractor<br>由傢俱承建商負責 | | |
| **Contact**<br>聯繫人 | | | |
| **Phone**<br>電話 | | | |
| **Fax**<br>傳真 | | | |
| **Email**<br>電郵 | | | |
| **Remark(s)**<br>其他 | Furniture Contractor should be provided shop drawing to CCD.<br>廠家須提供施工圖紙給 CCD 批核 | | |

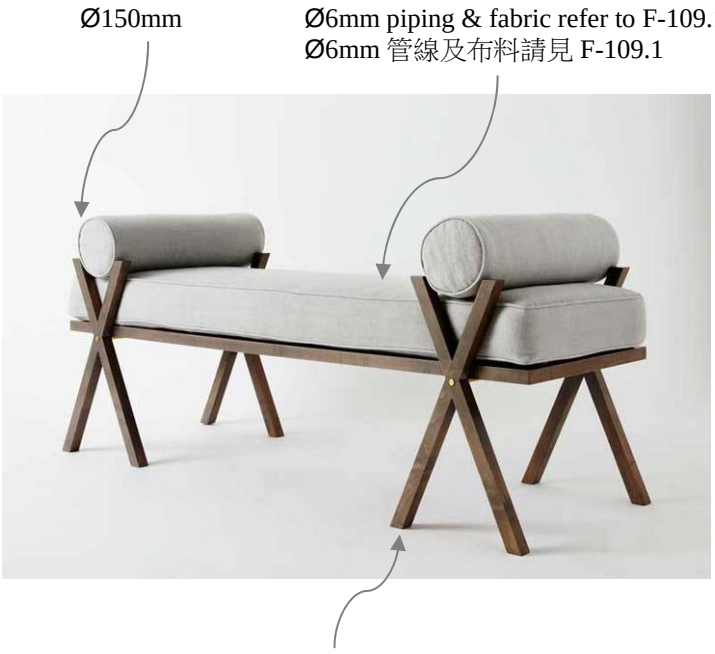

**NOTE (S) | 備註**

This drawing is for reference. All dimensions should be verified by the Contractor on site. This should be made in conjunction with the Design's specification and conditions of the contract. This drawing is the property of Cheng Chung Design (HK) Ltd. and is not to be reproduced without the Designer's consent.

圖片只作參考之用承辦商必須以地盤尺寸為准。

必須依設計師所訂樣版及尺寸為准。圖片屬於 CCD 未經准許不得翻印。

1.材料須保證品質並符合大量施工需要；2.承建商應提供實物樣板供設計師認可；

3.承建商必須提前預測材料定貨期事宜；4.如需替換同類其他品牌材料，需承建方提供同類品牌樣品供設計方重新確定；

5.承辦商或制造商必須提供深化圖給設計師作最終確認方可下單或生產；

# LOOSE FURNITURE SPECIFICATION
# 活動傢具圖表

CCD
ChengChung Design

| PROJECT \| 項目名稱 | PROJ. # \| 項目編號 | ISSUE DATE \| 發送日期 | |
|---|---|---|---|
| Yangon Pan Pacific Hotel, Myanmar<br>仰光泛太平洋酒店 | HK-1410 | 09 October, 2015 | **F-110** |

| | | | |
|---|---|---|---|
| **Description**<br>項目說明 | Armchair<br>扶手椅<br>(DK2A & DK2B Connection Door) | | |
| **Location**<br>位置 | Deluxe King & Deluxe HW Twin Guestrooms<br>標準大床房及標準雙併床房 | | |
| **Issue Stage**<br>發送階段 | Tender Package<br>招標階段 | | |
| **Rev. #**<br>修訂 | 3rd | **Total Page**<br>總頁碼 | 2 |
| **Revision Date**<br>修改日期 | 01 December 2015<br>31 March 2016 | | |
| **DETAIL SPECIFICATION \| 詳細內容** | | | |
| **Finish**<br>飾面 | | | |
| **Dimension**<br>尺寸（mm） | 寬 (W)<br>深 (D)<br>高 (H)<br>坐高 (SH) | 710mm<br>915mm<br>820mm<br>430mm | |
| **Qty.**<br>數量 | Verify | | |
| **Dwg. Ref**<br>圖號 | | | |
| **Manufacturer**<br>生產商 | | | |
| **Order Ref.**<br>訂貨編號 | | | |
| **Supplier**<br>供應商 | By Furniture Contractor<br>由傢俱承建商負責 | | |
| **Contact**<br>聯繫人 | | | |
| **Phone**<br>電話 | | | |
| **Fax**<br>傳真 | | | |
| **Email**<br>電郵 | | | |
| **Remark(s)**<br>其他 | Furniture Contractor should be provided shop drawing to CCD.<br>廠家須提供施工圖紙給 CCD 批核 | | |

Fabric refer to F-110.1
With Ø6mm piping
布料請見 F-110.1 配 Ø6mm 管線

Solid Dark Rosewood
(Natural Finish)
深色檀木實木(自然面)

**NOTE (S) | 備註**

This drawing is for reference. All dimensions should be verified by the Contractor on site. This should be made in conjunction with the Design's specification and conditions of the contract. This drawing is the property of Cheng Chung Design (HK) Ltd. and is not to be reproduced without the Designer's consent.
圖片只作參考之用承辦商必須以地盤尺寸為准。
必須依設計師所訂樣版及尺寸為准。圖片屬於 CCD 未經准許不得翻印。
1.材料須保證品質並符合大量施工需要；2.承建商應提供實物樣板供設計師認可；
3.承建商必須提前預測材料定貨期事宜；4.如需替換同類其他品牌材料，需承建方提供同類品牌樣品供設計方重新確定；
5.承辦商或制造商必須提供深化圖給設計師作最終確認方可下單或生產；

# LOOSE FURNITURE SPECIFICATION
# 活動傢具圖表

CCD
ChengChung Design

| PROJECT \| 項目名稱 | PROJ. # \| 項目編號 | ISSUE DATE \| 發送日期 | |
|---|---|---|---|
| Yangon Pan Pacific Hotel, Myanmar<br>仰光泛太平洋酒店 | HK-1410 | 09 October, 2015 | **F-110** |

| | | | |
|---|---|---|---|
| **Description**<br>項目說明 | Armchair<br>扶手椅<br>(DK2A & DK2B Connection Door) | | |
| **Location**<br>位置 | Deluxe King & Deluxe HW Twin Guestrooms<br>標準大床房及標準雙併床房 | | |
| **Issue Stage**<br>發送階段 | Tender Package<br>招標階段 | | |
| **Rev. #**<br>修訂 | 3rd | **Total Page**<br>總頁碼 | 2 |
| **Revision Date**<br>修改日期 | 01 December 2015<br>31 March 2016 | | |
| **DETAIL SPECIFICATION \| 詳細內容** | | | |
| **Finish**<br>飾面 | | | |
| **Dimension**<br>尺寸（mm） | 寬 (W)<br>深 (D)<br>高 (H)<br>坐高 (SH) | 450mm<br>150mm<br>460mm | |
| **Qty.**<br>數量 | Verify | | |
| **Dwg. Ref**<br>圖號 | | | |
| **Manufacturer**<br>生產商 | | | |
| **Order Ref.**<br>訂貨編號 | | | |
| **Supplier**<br>供應商 | By Furniture Contractor<br>由傢俱承建商負責 | | |
| **Contact**<br>聯繫人 | | | |
| **Phone**<br>電話 | | | |
| **Fax**<br>傳真 | | | |
| **Email**<br>電郵 | | | |
| **Remark(s)**<br>其他 | Furniture Contractor should be provided shop drawing to CCD.<br>廠家須提供施工圖紙給 CCD 批核 | | |

**F-110 A**

Fabric refer to F-110A.1
布料請見 F-110A.1

Ø6mm piping fabric refer to F-110A.1
Ø6mm 管線布料請見 F-110A.1

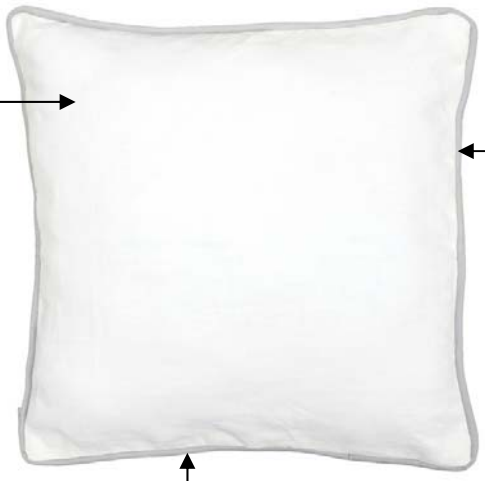

Hidden zipper color to match cushion fabric
隱藏式拉鏈顏色須與抱枕布料配合

- 1 Cushions per armchair.
- 每夫手椅有 1 個抱枕.
- Individual fabric pillowcase is needed of cushion insert.
- 枕芯須有獨立內套.

**NOTE (S) | 備註**

This drawing is for reference. All dimensions should be verified by the Contractor on site. This should be made in conjunction with the Design's specification and conditions of the contract. This drawing is the property of Cheng Chung Design (HK) Ltd. and is not to be reproduced without the Designer's consent.
圖片只作參考之用承辦商必須以地盤尺寸為准。
必須依設計師所訂樣版及尺寸為准。圖片屬於 CCD 未經准許不得翻印。
1.材料須保證品質並符合大量施工需要；2.承建商應提供實物樣板供設計師認可；
3.承建商必須提前預測材料定貨期事宜；4.如需替換同類其他品牌材料，需承建方提供同類品牌樣品供設計方重新確定；
5.承辦商或制造商必須提供深化圖給設計師作最終確認方可下單或生產；

# LOOSE FURNITURE SPECIFICATION
# 活動傢具圖表

CCD
ChengChung Design

| PROJECT \| 項目名稱 | PROJ. # \| 項目編號 | ISSUE DATE \| 發送日期 | |
|---|---|---|---|
| Yangon Pan Pacific Hotel, Myanmar<br>仰光泛太平洋酒店 | HK-1410 | 09 October, 2015 | **F-111** |

| | | | |
|---|---|---|---|
| **Description**<br>項目說明 | Twin Bed<br>單人床<br>(DK 2B DHWT) | | |
| **Location**<br>位置 | Deluxe King & Deluxe HW Twin Guestrooms<br>標準大床房及標準雙拼床房 | | |
| **Issue Stage**<br>發送階段 | Tender Package<br>招標階段 | | |
| **Rev. #**<br>修訂 | 2nd | **Total Page**<br>總頁碼 | 2 |
| **Revision Date**<br>修改日期 | 01 December 2015<br>31 March 2016 | | |
| **DETAIL SPECIFICATION \| 詳細內容** | | | |
| **Finish**<br>飾面 | | | |
| **Dimension**<br>尺寸（mm） | 寬 (W)<br>深 (D)<br>高 (H)<br>坐高 (SH) | 1100mm<br>2030mm<br>680mm | |
| **Qty.**<br>數量 | Verify | | |
| **Dwg. Ref**<br>圖號 | | | |
| **Manufacturer**<br>生產商 | | | |
| **Order Ref.**<br>訂貨編號 | | | |
| **Supplier**<br>供應商 | By Furniture Contractor<br>由傢俱承建商負責 | | |
| **Contact**<br>聯繫人 | | | |
| **Phone**<br>電話 | | | |
| **Fax**<br>傳真 | | | |
| **Email**<br>電郵 | | | |
| **Remark(s)**<br>其他 | Furniture Contractor should be provided shop drawing to CCD.<br>廠家須提供施工圖紙給 CCD 批核 | | |

Decorative Bed Throw
床上裝飾布條 (1800W x 500L)

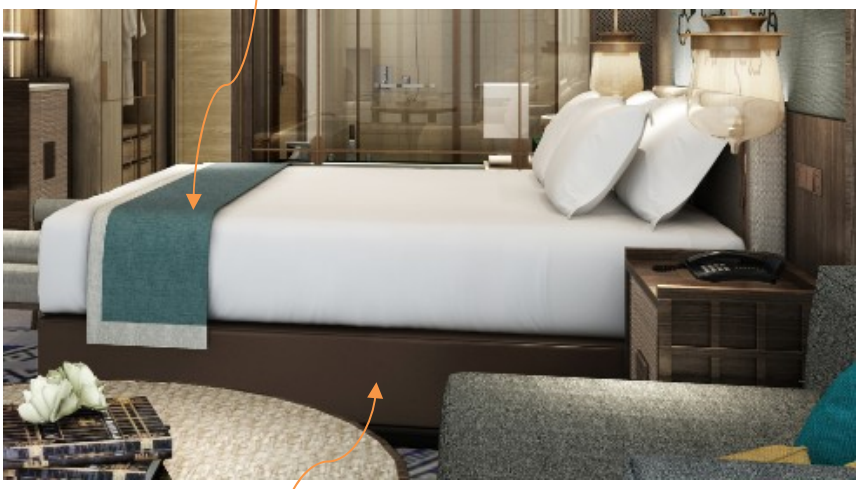

Bed Box Frame Vinyl Cover refer to F-111.1
Cover – elastic runs around all 4 sides.
床架仿皮革套請見 F-111.1
皮套圍邊有可拆式申縮性橡筋包邊

Double stitching on the vinyl cover at the corner edge
皮套於轉角位置須用雙車縫線拼接

- Twin Bed Mattress : 1100W x 2030L (mm)
- Overall bed buildup height : ±680mm
- 大床床墊：1100W x 2030L(mm)
- 床完成面總高：±680mm

**NOTE (S) | 備註**

This drawing is for reference. All dimensions should be verified by the Contractor on site. This should be made in conjunction with the Design's specification and conditions of the contract. This drawing is the property of Cheng Chung Design (HK) Ltd. and is not to be reproduced without the Designer's consent.
圖片只作參考之用承辦商必須以地盤尺寸為准。
必須依設計師所訂樣版及尺寸為准。圖片屬於 CCD 未經准許不得翻印。
1.材料須保證品質並符合大量施工需要；2.承建商應提供實物樣板供設計師認可；
3.承建商必須提前預測材料定貨期事宜；4.如需替換同類其他品牌材料，需承建方提供同類品牌樣品供設計方重新確定；
5.承辦商或制造商必須提供深化圖給設計師作最終確認方可下單或生產；

# LOOSE FURNITURE SPECIFICATION
# 活動傢具圖表

| PROJECT \| 項目名稱 | PROJ. # \| 項目編號 | ISSUE DATE \| 發送日期 | |
|---|---|---|---|
| Yangon Pan Pacific Hotel, Myanmar<br>仰光泛太平洋酒店 | HK-1410 | 09 October, 2015 | **F-111** |

| | | | |
|---|---|---|---|
| **Description**<br>項目說明 | Twin Bed<br>單人床<br>(DK 2B DHWT) | | |
| **Location**<br>位置 | Deluxe King & Deluxe HW Twin Guestrooms<br>標準大床房及標準雙拼床房 | | |
| **Issue Stage**<br>發送階段 | Tender Package<br>招標階段 | | |
| **Rev. #**<br>修訂 | 2nd | **Total Page**<br>總頁碼 | 2 |
| **Revision Date**<br>修改日期 | 01 December 2015<br>31 March 2016 | | |
| **DETAIL SPECIFICATION \| 詳細內容** | | | |
| **Finish**<br>飾面 | | | |
| **Dimension**<br>尺寸（mm） | 寬 (W)<br>深 (D)<br>高 (H)<br>坐高 (SH) | 1100mm<br>2030mm<br>680mm | |
| **Qty.**<br>數量 | Verify | | |
| **Dwg. Ref**<br>圖號 | | | |
| **Manufacturer**<br>生產商 | | | |
| **Order Ref.**<br>訂貨編號 | | | |
| **Supplier**<br>供應商 | By Furniture Contractor<br>由傢俱承建商負責 | | |
| **Contact**<br>聯繫人 | | | |
| **Phone**<br>電話 | | | |
| **Fax**<br>傳真 | | | |
| **Email**<br>電郵 | | | |
| **Remark(s)**<br>其他 | Furniture Contractor should be provided shop drawing to CCD.<br>廠家須提供施工圖紙給 CCD 批核 | | |

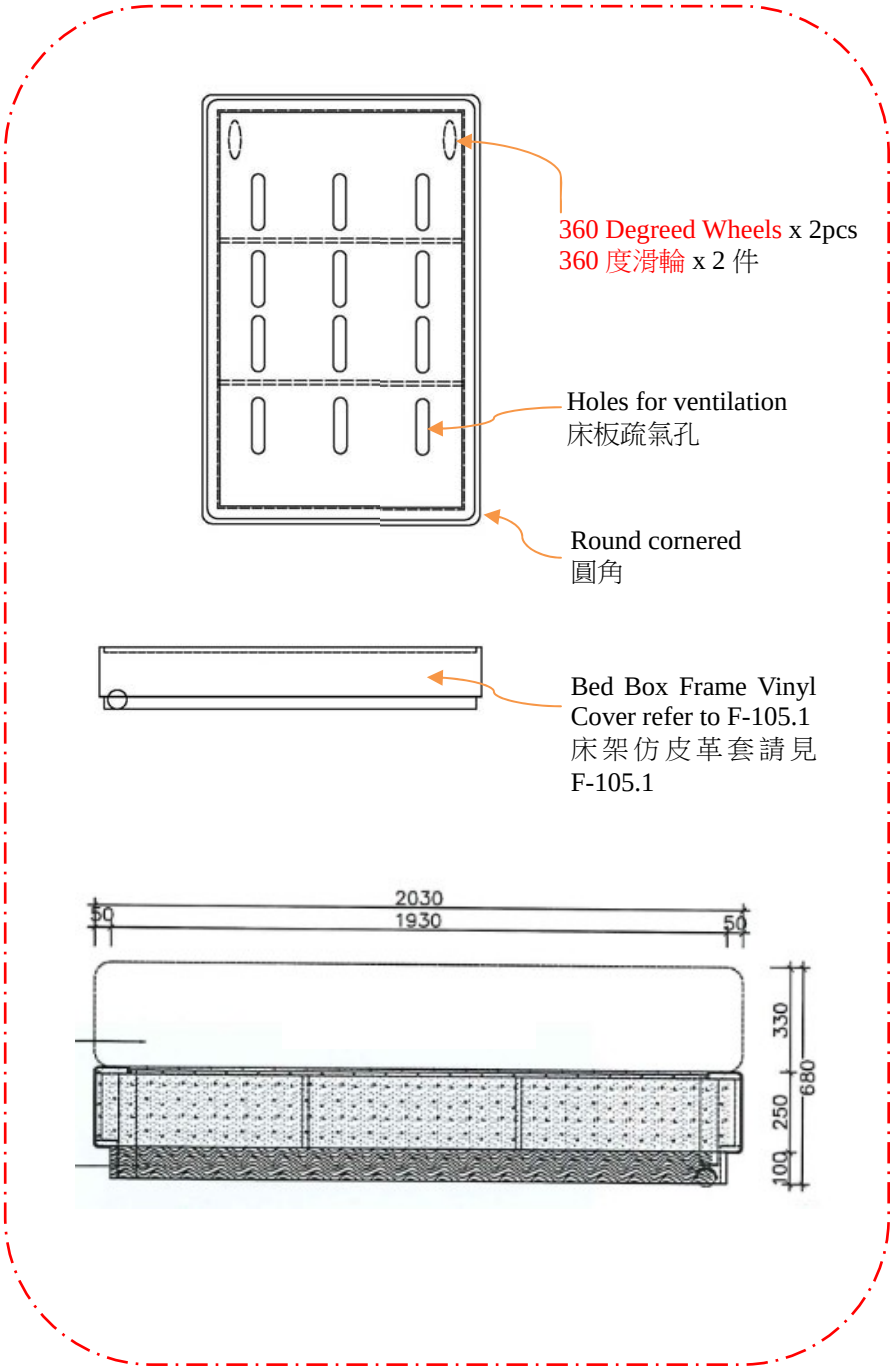


**NOTE (S) | 備註**

This drawing is for reference. All dimensions should be verified by the Contractor on site. This should be made in conjunction with the Design's specification and conditions of the contract. This drawing is the property of Cheng Chung Design (HK) Ltd. and is not to be reproduced without the Designer's consent.

圖片只作參考之用承辦商必須以地盤尺寸為准。

必須依設計師所訂樣版及尺寸為准。圖片屬於 CCD 未經准許不得翻印。

1.材料須保證品質並符合大量施工需要；2.承建商應提供實物樣板供設計師認可；

3.承建商必須提前預測材料定貨期事宜；4.如需替換同類其他品牌材料，需承建方提供同類品牌樣品供設計方重新確定；

5.承辦商或制造商必須提供深化圖給設計師作最終確認方可下單或生產；

# LOOSE FURNITURE SPECIFICATION
# 活動傢具圖表

| PROJECT \| 項目名稱 | PROJ. # \| 項目編號 | ISSUE DATE \| 發送日期 | |
|---|---|---|---|
| Yangon Pan Pacific Hotel, Myanmar<br>仰光泛太平洋酒店 | HK-1410 | 09 October, 2015 | **F-112** |

| | | | |
|---|---|---|---|
| **Description**<br>項目說明 | Dressing Mirror with Towel Rack @ Bathroom<br>梳妝鏡子連毛巾架(衛生間) | | |
| **Location**<br>位置 | Deluxe King & Deluxe HW Twin Guestrooms<br>標準大床房及標準雙拼床房 (DK1) | | |
| **Issue Stage**<br>發送階段 | Tender Package<br>招標階段 | | |
| **Rev. #**<br>修訂 | | **Total Page**<br>總頁碼 | 1 |
| **Revision Date**<br>修改日期 | | | |
| **DETAIL SPECIFICATION \| 詳細內容** | | | |
| **Finish**<br>飾面 | | | |
| **Dimension**<br>尺寸（mm） | 寬 (W)<br>深 (D)<br>高 (H)<br>坐高 (SH) | 655mm<br>320mm<br>700mm | |
| **Qty.**<br>數量 | Verify | | |
| **Dwg. Ref**<br>圖號 | | | |
| **Manufacturer**<br>生產商 | | | |
| **Order Ref.**<br>訂貨編號 | | | |
| **Supplier**<br>供應商 | By Furniture Contractor<br>由傢俱承建商負責 | | |
| **Contact**<br>聯繫人 | | | |
| **Phone**<br>電話 | | | |
| **Fax**<br>傳真 | | | |
| **Email**<br>電郵 | | | |
| **Remark(s)**<br>其他 | Furniture Contractor should be provided shop drawing to CCD.<br>廠家須提供施工圖紙給 CCD 批核 | | |

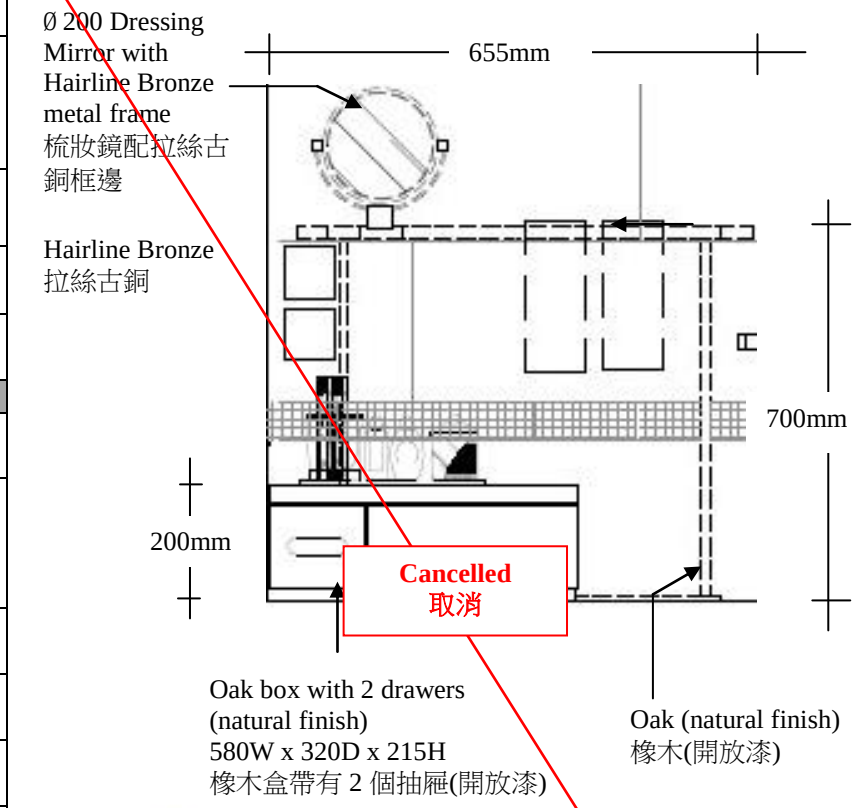

**NOTE (S) | 備註**

This drawing is for reference. All dimensions should be verified by the Contractor on site. This should be made in conjunction with the Design's specification and conditions of the contract. This drawing is the property of Cheng Chung Design (HK) Ltd. and is not to be reproduced without the Designer's consent.

圖片只作參考之用承辦商必須以地盤尺寸為准。

必須依設計師所訂樣版及尺寸為准。圖片屬於 CCD 未經准許不得翻印。

1.材料須保證品質並符合大量施工需要；2.承建商應提供實物樣板供設計師認可；

3.承建商必須提前預測材料定貨期事宜；4.如需替換同類其他品牌材料，需承建方提供同類品牌樣品供設計方重新確定；

5.承辦商或制造商必須提供深化圖給設計師作最終確認方可下單或生產；

# LOOSE FURNITURE SPECIFICATION
# 活動傢具圖表

CCD
ChengChung Design

| PROJECT \| 項目名稱 | PROJ. # \| 項目編號 | ISSUE DATE \| 發送日期 | |
|---|---|---|---|
| Yangon Pan Pacific Hotel, Myanmar<br>仰光泛太平洋酒店 | HK-1410 | 09 October, 2015 | **F-112** |

| | | | |
|---|---|---|---|
| **Description**<br>項目說明 | Motorized Blackout Roller Blind @ Bathroom<br>電動遮光捲簾(衛生間)<br>(DK1, DK2A & DK2B) | | |
| **Location**<br>位置 | Deluxe King & Deluxe HW Twin Guestrooms<br>標準大床房及標準雙拼床房 | | |
| **Issue Stage**<br>發送階段 | Tender Package<br>招標階段 | | |
| **Rev. #**<br>修訂 | 1st | **Total Page**<br>總頁碼 | 1 |
| **Revision Date**<br>修改日期 | 31 March 2016 | | |
| **DETAIL SPECIFICATION \| 詳細內容** | | | |
| **Finish**<br>飾面 | | | |
| **Dimension**<br>尺寸（mm） | 寬 (W)<br>深 (D)<br>高 (H)<br>坐高 (SH) | check on site<br>按現場呎吋 | |
| **Qty.**<br>數量 | Verify | | |
| **Dwg. Ref**<br>圖號 | | | |
| **Manufacturer**<br>生產商 | | | |
| **Order Ref.**<br>訂貨編號 | | | |
| **Supplier**<br>供應商 | | | |
| **Contact**<br>聯繫人 | | | |
| **Phone**<br>電話 | | | |
| **Fax**<br>傳真 | | | |
| **Email**<br>電郵 | | | |
| **Remark(s)**<br>其他 | | | |

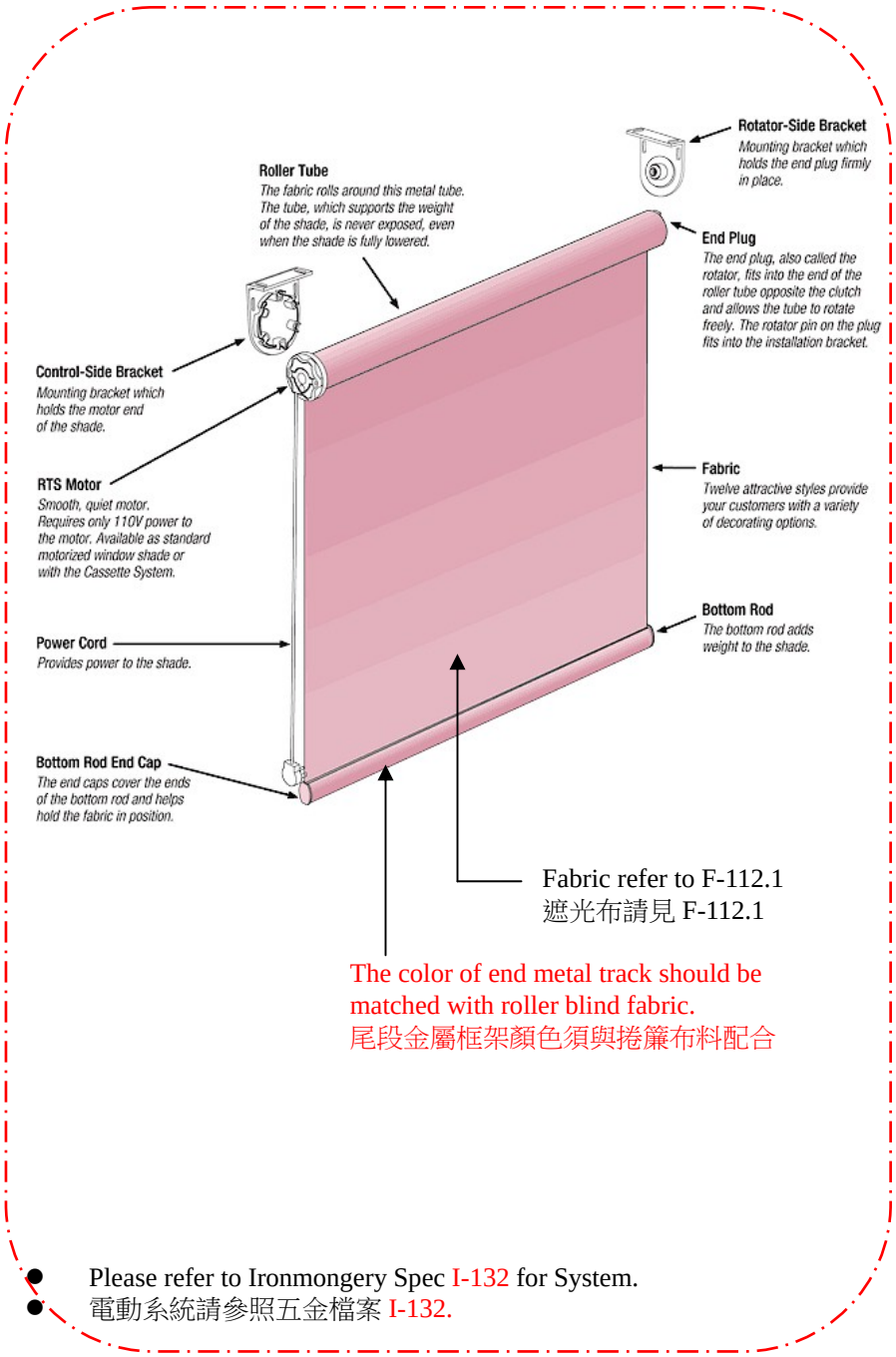


- Please refer to Ironmongery Spec I-132 for System.
- 電動系統請參照五金檔案 I-132.

**NOTE (S) | 備註**

This drawing is for reference. All dimensions should be verified by the Contractor on site. This should be made in conjunction with the Design's specification and conditions of the contract. This drawing is the property of Cheng Chung Design (HK) Ltd. and is not to be reproduced without the Designer's consent.

圖片只作參考之用承辦商必須以地盤尺寸為准。

必須依設計師所訂樣版及尺寸為准。圖片屬於 CCD 未經准許不得翻印。

1.材料須保證品質並符合大量施工需要；2.承建商應提供實物樣板供設計師認可；

3.承建商必須提前預測材料定貨期事宜；4.如需替換同類其他品牌材料，需承建方提供同類品牌樣品供設計方重新確定；

5.承辦商或制造商必須提供深化圖給設計師作最終確認方可下單或生產；

# LOOSE FURNITURE SPECIFICATION
# 活動傢具圖表

CCD
ChengChung Design

| PROJECT \| 項目名稱 | PROJ. # \| 項目編號 | ISSUE DATE \| 發送日期 | |
|---|---|---|---|
| Yangon Pan Pacific Hotel, Myanmar<br>仰光泛太平洋酒店 | HK-1410 | 09 October, 2015 | **F-113** |

| | | | |
|---|---|---|---|
| **Description**<br>項目說明 | Towel Rake with drawer @ Bathroom<br>毛巾架連抽屜(衛生間) | | |
| **Location**<br>位置 | Deluxe King & Deluxe HW Twin Guestrooms<br>標準大床房及標準雙拼床房 (DK1) | | |
| **Issue Stage**<br>發送階段 | Tender Package<br>招標階段 | | |
| **Rev. #**<br>修訂 | 3rd | **Total Page**<br>總頁碼 | 1 |
| **Revision Date**<br>修改日期 | 01 December 2015<br>31 March 2016 | | |
| **DETAIL SPECIFICATION \| 詳細內容** | | | |
| **Finish**<br>飾面 | | | |
| **Dimension**<br>尺寸（mm） | 寬 (W)<br>深 (D)<br>高 (H) | 440mm<br>310mm<br>1500mm | |
| **Qty.**<br>數量 | Verify | | |
| **Dwg. Ref**<br>圖號 | | | |
| **Manufacturer**<br>生產商 | | | |
| **Order Ref.**<br>訂貨編號 | | | |
| **Supplier**<br>供應商 | By Furniture Contractor<br>由傢俱承建商負責 | | |
| **Contact**<br>聯繫人 | | | |
| **Phone**<br>電話 | | | |
| **Fax**<br>傳真 | | | |
| **Email**<br>電郵 | | | |
| **Remark(s)**<br>其他 | Furniture Contractor should be provided shop drawing to CCD.<br>廠家須提供施工圖紙給 CCD 批核 | | |

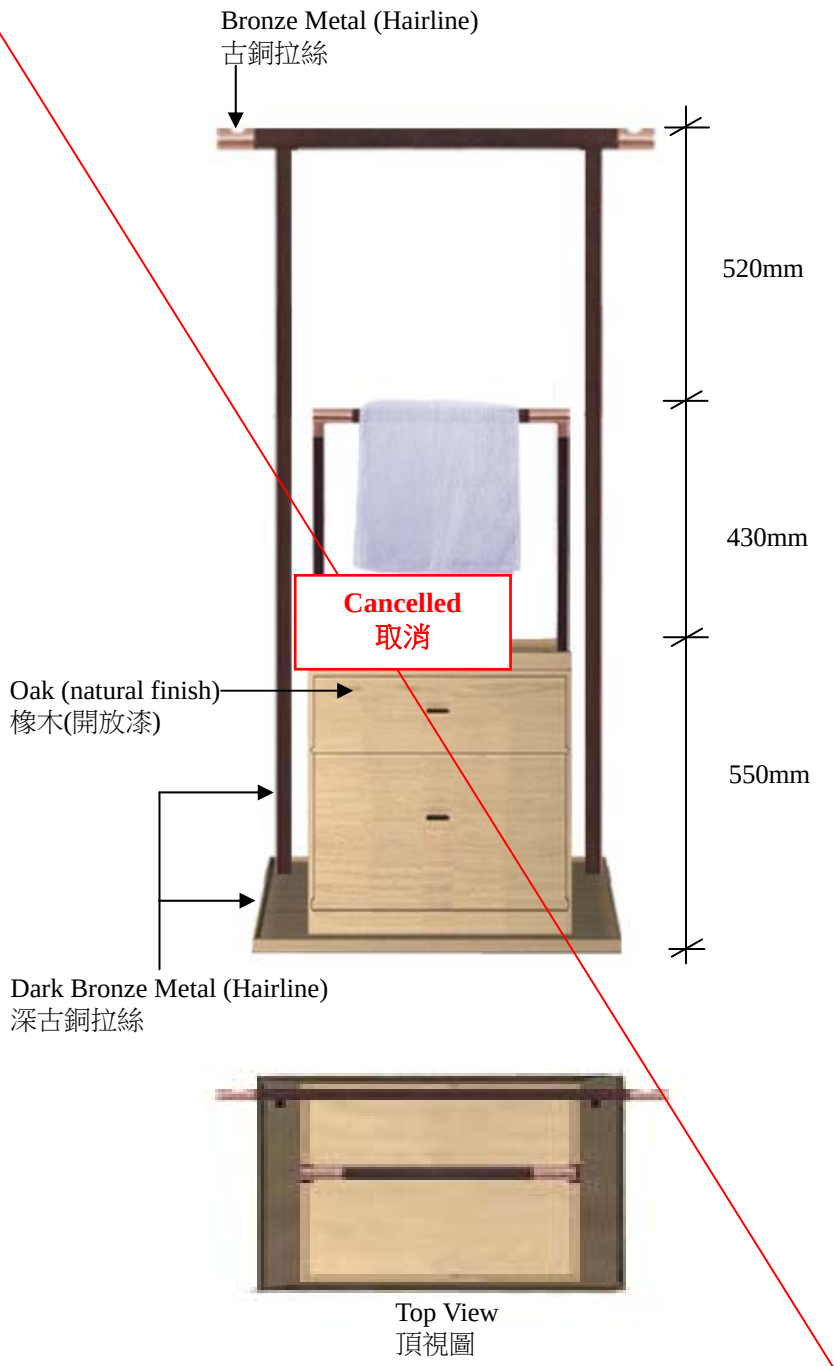


**NOTE (S) | 備註**

This drawing is for reference. All dimensions should be verified by the Contractor on site. This should be made in conjunction with the Design's specification and conditions of the contract. This drawing is the property of Cheng Chung Design (HK) Ltd. and is not to be reproduced without the Designer's consent.

圖片只作參考之用承辦商必須以地盤尺寸為准。

必須依設計師所訂樣版及尺寸為准。圖片屬於 CCD 未經准許不得翻印。

1.材料須保證品質並符合大量施工需要；2.承建商應提供實物樣板供設計師認可；

3.承建商必須提前預測材料定貨期事宜；4.如需替換同類其他品牌材料，需承建方提供同類品牌樣品供設計方重新確定；

5.承辦商或制造商必須提供深化圖給設計師作最終確認方可下單或生產；

# LOOSE FURNITURE SPECIFICATION
# 活動傢具圖表

| PROJECT \| 項目名稱 | PROJ. # \| 項目編號 | ISSUE DATE \| 發送日期 | |
|---|---|---|---|
| Yangon Pan Pacific Hotel, Myanmar<br>仰光泛太平洋酒店 | HK-1410 | 09 October, 2015 | **F-114** |

| | | | |
|---|---|---|---|
| **Description**<br>項目說明 | Floor Towel Rack (Small) @ Bathroom<br>地面毛巾架 (小) (衛生間) | | |
| **Location**<br>位置 | Deluxe King & Deluxe HW Twin Guestrooms<br>標準大床房及標準雙拼床房 (DK1) | | |
| **Issue Stage**<br>發送階段 | Tender Package<br>招標階段 | | |
| **Rev. #**<br>修訂 | 1st | **Total Page**<br>總頁碼 | 1 |
| **Revision Date**<br>修改日期 | 31 March 2016 | | |
| **DETAIL SPECIFICATION \| 詳細內容** | | | |
| **Finish**<br>飾面 | | | |
| **Dimension**<br>尺寸 (mm) | 寬 (W)<br>深 (D)<br>高 (H)<br>坐高 (SH) | 650mm<br>300mm<br>200mm | |
| **Qty.**<br>數量 | Verify | | |
| **Dwg. Ref**<br>圖號 | | | |
| **Manufacturer**<br>生產商 | | | |
| **Order Ref.**<br>訂貨編號 | | | |
| **Supplier**<br>供應商 | By Furniture Contractor<br>由傢俱承建商負責 | | |
| **Contact**<br>聯繫人 | | | |
| **Phone**<br>電話 | | | |
| **Fax**<br>傳真 | | | |
| **Email**<br>電郵 | | | |
| **Remark(s)**<br>其他 | Furniture Contractor should be provided shop drawing to CCD.<br>廠家須提供施工圖紙給 CCD 批核 | | |

**NOTE (S) | 備註**

This drawing is for reference. All dimensions should be verified by the Contractor on site. This should be made in conjunction with the Design's specification and conditions of the contract. This drawing is the property of Cheng Chung Design (HK) Ltd. and is not to be reproduced without the Designer's consent.

圖片只作參考之用承辦商必須以地盤尺寸為准。

必須依設計師所訂樣版及尺寸為准。圖片屬於 CCD 未經准許不得翻印。

1.材料須保證品質並符合大量施工需要；2.承建商應提供實物樣板供設計師認可；

3.承建商必須提前預測材料定貨期事宜；4.如需替換同類其他品牌材料，需承建方提供同類品牌樣品供設計方重新確定；

5.承辦商或制造商必須提供深化圖給設計師作最終確認方可下單或生產；

# LOOSE FURNITURE SPECIFICATION
# 活動傢具圖表

CCD
ChengChung Design

| PROJECT \| 項目名稱 | PROJ. # \| 項目編號 | ISSUE DATE \| 發送日期 | |
|---|---|---|---|
| Yangon Pan Pacific Hotel, Myanmar<br>仰光泛太平洋酒店 | HK-1410 | 09 October, 2015 | **F-115** |

| | | | |
|---|---|---|---|
| **Description**<br>項目說明 | Sofa (Arm on Left)<br>沙發(左邊扶手)<br>(DK2B DHWT) | | |
| **Location**<br>位置 | Deluxe King & Deluxe HW Twin Guestrooms<br>標準大床房及標準雙拼床房 | | |
| **Issue Stage**<br>發送階段 | Tender Package<br>招標階段 | | |
| **Rev. #**<br>修訂 | 1st | **Total Page**<br>總頁碼 | 3 |
| **Revision Date**<br>修改日期 | 31 March 2016 | | |
| **DETAIL SPECIFICATION \| 詳細內容** | | | |
| **Finish**<br>飾面 | | | |
| **Dimension**<br>尺寸（mm） | 寬 (W)<br>深 (D)<br>高 (H)<br>坐高 (SH) | 1500mm<br>880mm<br>700mm<br>430mm | |
| **Qty.**<br>數量 | Verify | | |
| **Dwg. Ref**<br>圖號 | | | |
| **Manufacturer**<br>生產商 | | | |
| **Order Ref.**<br>訂貨編號 | | | |
| **Supplier**<br>供應商 | By Furniture Contractor<br>由傢俱承建商負責 | | |
| **Contact**<br>聯繫人 | | | |
| **Phone**<br>電話 | | | |
| **Fax**<br>傳真 | | | |
| **Email**<br>電郵 | | | |
| **Remark(s)**<br>其他 | Furniture Contractor should be provided shop drawing to CCD.<br>廠家須提供施工圖紙給 CCD 批核 | | |

**NOTE (S) | 備註**

This drawing is for reference. All dimensions should be verified by the Contractor on site. This should be made in conjunction with the Design's specification and conditions of the contract. This drawing is the property of Cheng Chung Design (HK) Ltd. and is not to be reproduced without the Designer's consent.

圖片只作參考之用承辦商必須以地盤尺寸為准。

必須依設計師所訂樣版及尺寸為准。圖片屬於 CCD 未經准許不得翻印。

1.材料須保證品質並符合大量施工需要；2.承建商應提供實物樣板供設計師認可；

3.承建商必須提前預測材料定貨期事宜；4.如需替換同類其他品牌材料，需承建方提供同類品牌樣品供設計方重新確定；

5.承辦商或制造商必須提供深化圖給設計師作最終確認方可下單或生產；

# LOOSE FURNITURE SPECIFICATION
# 活動傢具圖表

| PROJECT \| 項目名稱 | PROJ. # \| 項目編號 | ISSUE DATE \| 發送日期 | |
|---|---|---|---|
| Yangon Pan Pacific Hotel, Myanmar<br>仰光泛太平洋酒店 | HK-1410 | 09 October, 2015 | **F-115** |

| | | | |
|---|---|---|---|
| **Description**<br>項目說明 | Sofa Cushion A<br>沙發抱枕 A | | |
| **Location**<br>位置 | Deluxe King & Deluxe HW Twin Guestrooms<br>標準大床房及標準雙拼床房 | | |
| **Issue Stage**<br>發送階段 | Tender Package<br>招標階段 | | |
| **Rev. #**<br>修訂 | 1st | **Total Page**<br>總頁碼 | 3 |
| **Revision Date**<br>修改日期 | 31 March 2016 | | |
| **DETAIL SPECIFICATION \| 詳細內容** | | | |
| **Finish**<br>飾面 | | | |
| **Dimension**<br>尺寸（mm） | 寬 (W)<br>深 (D)<br>高 (H)<br>坐高 (SH) | 500mm<br>150mm<br>500mm | |
| **Qty.**<br>數量 | 1 * Verify | | |
| **Dwg. Ref**<br>圖號 | | | |
| **Manufacturer**<br>生產商 | | | |
| **Order Ref.**<br>訂貨編號 | | | |
| **Supplier**<br>供應商 | By Furniture Contractor<br>由傢俱承建商負責 | | |
| **Contact**<br>聯繫人 | | | |
| **Phone**<br>電話 | | | |
| **Fax**<br>傳真 | | | |
| **Email**<br>電郵 | | | |
| **Remark(s)**<br>其他 | Furniture Contractor should be provided shop drawing to CCD.<br>廠家須提供施工圖紙給 CCD 批核 | | |

**F-115 A**

Fabric refer to F-115A.1
布料請見 F-115A.1

Ø6mm piping fabric refer to F-115A.1
Ø6mm 管線布料請見 F-115A.1

Hidden zipper color to match cushion fabric
隱藏式拉鏈顏色須與抱枕布料配合

- 1 Cushion per sofa.
- 每沙發有 1 個抱枕.
- Individual fabric pillowcase is needed of cushion insert.
- 枕芯須有獨立內套.

**NOTE (S) | 備註**

This drawing is for reference. All dimensions should be verified by the Contractor on site. This should be made in conjunction with the Design's specification and conditions of the contract. This drawing is the property of Cheng Chung Design (HK) Ltd. and is not to be reproduced without the Designer's consent.
圖片只作參考之用承辦商必須以地盤尺寸為准。
必須依設計師所訂樣版及尺寸為准。圖片屬於 CCD 未經准許不得翻印。
1.材料須保證品質並符合大量施工需要；2.承建商應提供實物樣板供設計師認可；
3.承建商必須提前預測材料定貨期事宜；4.如需替換同類其他品牌材料，需承建方提供同類品牌樣品供設計方重新確定；
5.承辦商或制造商必須提供深化圖給設計師作最終確認方可下單或生產；

# LOOSE FURNITURE SPECIFICATION
# 活動傢具圖表

CCD
ChengChung Design

| PROJECT \| 項目名稱 | PROJ. # \| 項目編號 | ISSUE DATE \| 發送日期 | |
|---|---|---|---|
| Yangon Pan Pacific Hotel, Myanmar<br>仰光泛太平洋酒店 | HK-1410 | 09 October, 2015 | **F-115** |

| | | | |
|---|---|---|---|
| **Description**<br>項目說明 | Sofa Cushion B<br>沙發抱枕 B | | |
| **Location**<br>位置 | Deluxe King & Deluxe HW Twin Guestrooms<br>標準大床房及標準雙拼床房 | | |
| **Issue Stage**<br>發送階段 | Tender Package<br>招標階段 | | |
| **Rev. #**<br>修訂 | 1st | **Total Page**<br>總頁碼 | 3 |
| **Revision Date**<br>修改日期 | 31 March 2016 | | |
| **DETAIL SPECIFICATION \| 詳細內容** | | | |
| **Finish**<br>飾面 | | | |
| **Dimension**<br>尺寸（mm） | 寬 (W)<br>深 (D)<br>高 (H)<br>坐高 (SH) | 500mm<br>150mm<br>500mm | |
| **Qty.**<br>數量 | 1 * Verify | | |
| **Dwg. Ref**<br>圖號 | | | |
| **Manufacturer**<br>生產商 | | | |
| **Order Ref.**<br>訂貨編號 | | | |
| **Supplier**<br>供應商 | By Furniture Contractor<br>由傢俱承建商負責 | | |
| **Contact**<br>聯繫人 | | | |
| **Phone**<br>電話 | | | |
| **Fax**<br>傳真 | | | |
| **Email**<br>電郵 | | | |
| **Remark(s)**<br>其他 | Furniture Contractor should be provided shop drawing to CCD.<br>廠家須提供施工圖紙給 CCD 批核 | | |

**F-115 B**

Fabric refer to F-115B.1
布料請見 F-115B.1

Ø6mm piping fabric refer to F-115B.1
Ø6mm 管線布料請見 F-115B.1

Hidden zipper color to match cushion fabric
隱藏式拉鏈顏色須與抱枕布料配合

- 1 Cushion per sofa.
- 每沙發有 1 個抱枕.
- Individual fabric pillowcase is needed of cushion insert.
- 枕心須有獨立內套.

**NOTE (S) | 備註**

This drawing is for reference. All dimensions should be verified by the Contractor on site. This should be made in conjunction with the Design's specification and conditions of the contract. This drawing is the property of Cheng Chung Design (HK) Ltd. and is not to be reproduced without the Designer's consent.
圖片只作參考之用承辦商必須以地盤尺寸為准。
必須依設計師所訂樣版及尺寸為准。圖片屬於 CCD 未經准許不得翻印。
1.材料須保證品質並符合大量施工需要；2.承建商應提供實物樣板供設計師認可；
3.承建商必須提前預測材料定貨期事宜；4.如需替換同類其他品牌材料，需承建方提供同類品牌樣品供設計方重新確定；
5.承辦商或制造商必須提供深化圖給設計師作最終確認方可下單或生產；